Warum wählen SHENZHEN STARTEN ?

SHENZHEN STARTEN ist verifiziert durch SGS , alle das Hardware von unser Unternehmen sind verifiziert mit Ausgezeichnet Qualität.

Alibaba.com Gold Plus Supplier

Main Product Lines Verification Report

Presented to

Shenzhen Launch Co., Ltd.

深圳市朗驰商贸有限公司

Company Address	B5003, Building 3, Yilida Building, No. 1092 Nanshan Avenue, Dengliang Community, Nanshan Street, Nanshan District, Shenzhen City, Guangdong Province, China
Consigner of Assessment:	Alibaba
Gold Supplier Member ID:	launch168
Gold Supplier Company Name:	Shenzhen Launch Co., Ltd.
Contact Person:	Mr. Binfeng Gao
Phone Number:	0086-13802569770
Fax Number:	0086-755-86372611
Email:	gbf999@china.com
Website Address (URL):	http://launch-china.en.alibaba.com

Service Provided by SGS
Report No.: 19536352_P+T

Verified Alibaba.com Gold Plus Supplier
Main Product Lines Verification

Report No.: 19536352_P+T

Cutting Machine	XN	4	3	Acceptable
Laser Cutting Machine	MPS-3015D	1	2	Acceptable
4.5M CNC Processing Center	PRATIC	1	3	Acceptable
CNC Processing Meter	JNC	8	3	Acceptable
Shearing Machine	6X2500	2	3	Acceptable
Bending Machine	AG-1030II	4	3	Acceptable
Punching Machine	N/A	36	6	Acceptable
Coating Line	N/A	1	1.5	Acceptable
Lathing Machine	N/A	1	6	Acceptable
Grinding Machine	LITAO	4	6	Acceptable
Milling Machine	TONG ZHENG	2	6	Acceptable
Welding Machine	N/A	5	5	Acceptable
Tube Processing Machine	N/A	2	5	Acceptable

Cutting Machine	Laser Cutting Machine	4.5M CNC Processing Center
CNC Processing Meter	Shearing Machine	Bending Machine
Punching Machine	Coating Line	Lathing Machine

Treppengeländer 1/2 "Glasseitenmontage Glasabstandshalter populäres Design für Innengeländeranwendungen.

1. Spezifikationen für die Glasabstandshalterung -

1. Modell # SF-50
2. DIA 50mm
3. Für 10-19mm dickes Glas
4. Moq 10 stück
5. mit M12 * 120 BOLZEN für Betonmontage oder M12 * 72 Holzschraube für Holzmontage
6. USD 7,1 / Stk. Basierend auf 100+ Stk

2. Fotos der 1/2 "Glashalterung für die seitliche Montage des Treppengeländers

3. Zeichnung für SF-50

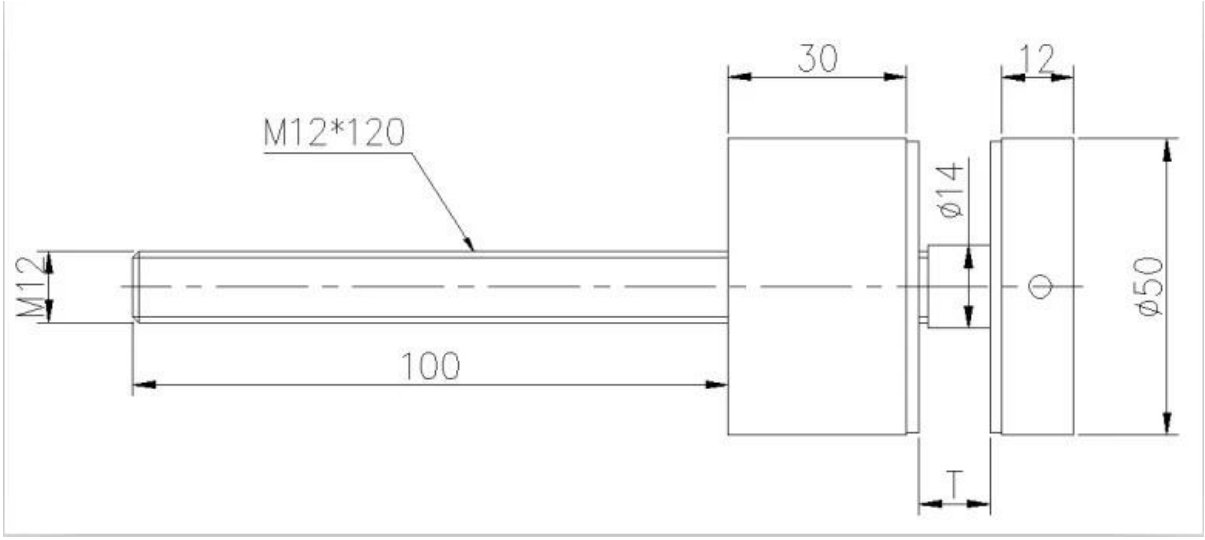

4. Weitere Modelle der Abstandshalterung -

Part No.	Material	Finish	Body	Bolt size
▪ SF-30 ▪ SF-40 ▪ SF-50 ▪ SF-50A	▪ AISI 304 ▪ AISI 316	▪ Satin ▪ Mirror	▪ 30x10; 30x25mm ▪ 40x10; 40x30mm ▪ 50x12; 50x30mm ▪ 50x12; 50x50mm ▪ silicon rubber gasket included	▪ M10x120 bolt ▪ M10x72 wood screw ▪ M8x100 bolt ▪ M8 x72 wood screw

Part No.	Material	Finish	Body	Bolt size
▪ SF-38Z	▪ AISI 304 ▪ AISI 316	▪ Satin ▪ Mirror	▪ hollow type ▪ 38x7.5;38x38mm ▪ silicon rubber gasket included	▪ M8x70 hexagonal screw

Part No.	Material	Finish	Body	Mounting plate size
▪ SF-50T	▪ AISI 304 ▪ AISI 316	▪ Satin ▪ Mirror	▪ 50x10;50x30mm ▪ silicon rubber gasket included	▪ 200x100x10mm