Modern design glass railings round standoff glass clamp, glass frameless standoff clamp hardware stainless steel 316 brushed finish for 1/2: thickness glass .

glass frameless standoff clamp hardware specs.

MODEL	SF- 50
For glass thickness	8-19mm
DIAMETER	50MM
DIMENSIONS	12MM CAP , 30MM BODY/50MM,
BOLT	M12*120
MOQ	20 PCS

glass frameless standoff clamp hardware photos
mirror finish , concrete mount

satin finish , wood mount

Drawing for glass frameless standoff clamp hardware

Standoff with concrete bolt, # SF-50

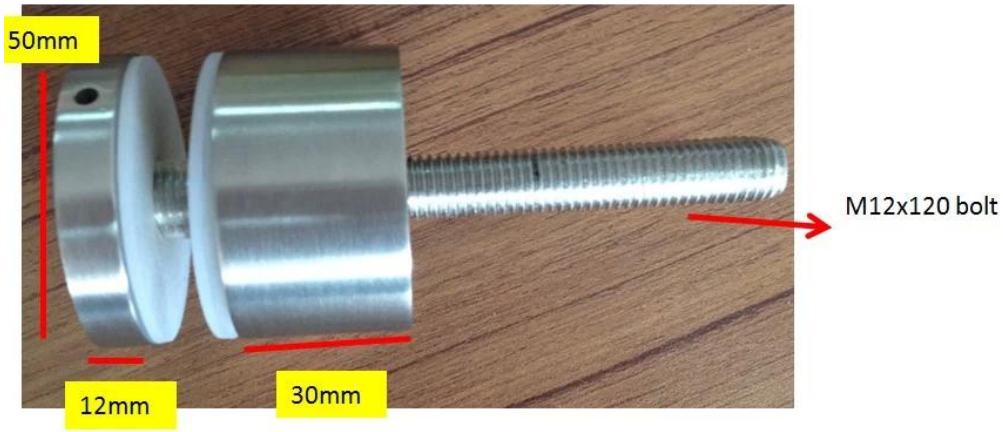

Standoff with wood screw , # SF-50A

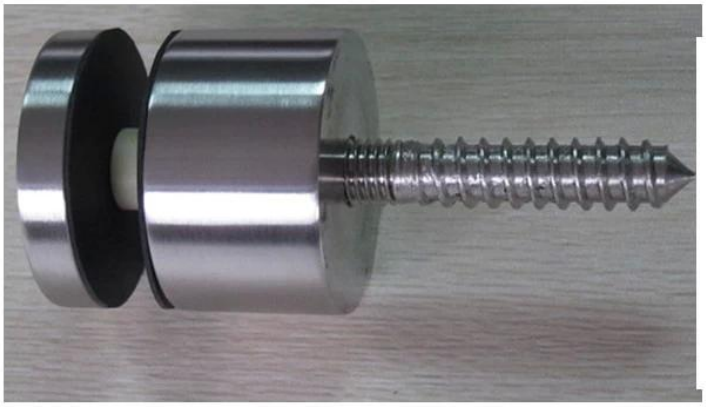

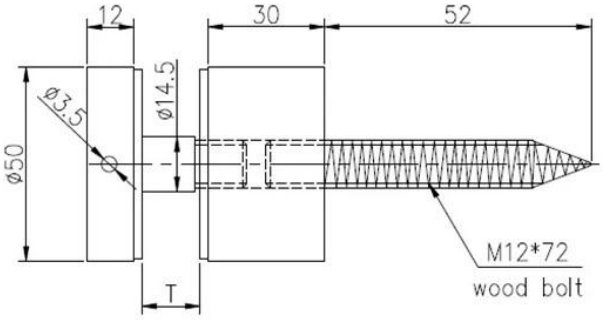

Other models of glass frameless standoff clamp hardware

STAND OFF

Part No.	Material	Finish	Body	Bolt size
▪ SF-30 ▪ SF-40 ▪ SF-50 ▪ SF-50A	▪ AISI 304 ▪ AISI 316	▪ Satin ▪ Mirror	▪ 30x10; 30x25mm ▪ 40x10; 40x30mm ▪ 50x12; 50x30mm ▪ 50x12; 50x50mm ▪ silicon rubber gasket included	▪ M10x120 bolt ▪ M10x72 wood screw ▪ M8x100 bolt ▪ M8 x72 wood screw

Part No.	Material	Finish	Body	Bolt size
▪ SF-38Z	▪ AISI 304 ▪ AISI 316	▪ Satin ▪ Mirror	▪ hollow type ▪ 38x7.5;38x38mm ▪ silicon rubber gasket included	▪ M8x70 hexagonal screw

Project photos of glass frameless standoff clamp hardware

www.chinabalustrade.com