Glazen knop Balustrade systeem RVS balustrade

specificaties:

Artikel naam	Glazen knopbalustrade, standoff glazen balustrade, glazen reling afstandhouders, glazen afstandsbouten
Materiaal	Roestvrij staal 316/304
Oppervlakte behandeling	Satijn geborsteld of glanzend gepolijst
Dimensie	50 * 12mm kap, 50 * 30mm body
Siliconen rubberen pakking	ingesloten
Voor glasdikte	10-19mm
Moppen naar	Houten of betonnen ondergrond

Toepassingsplaatsen: glazen buitenleuning en glazen binnenrailsysteem

Toepassingsgebieden:
balkon glazen balustrade
trap glazen balustrade ontwerp
terras glazen balustrade ontwerp etc.

Dia 50 mm Glass Standoff / Button in **Satijnen afwerking**:

Dia 50 mm Glass Standoff / Button in **Mirror Finish**:

Met houtschroef voor montage op houten ondergrond:

Technische tekening:

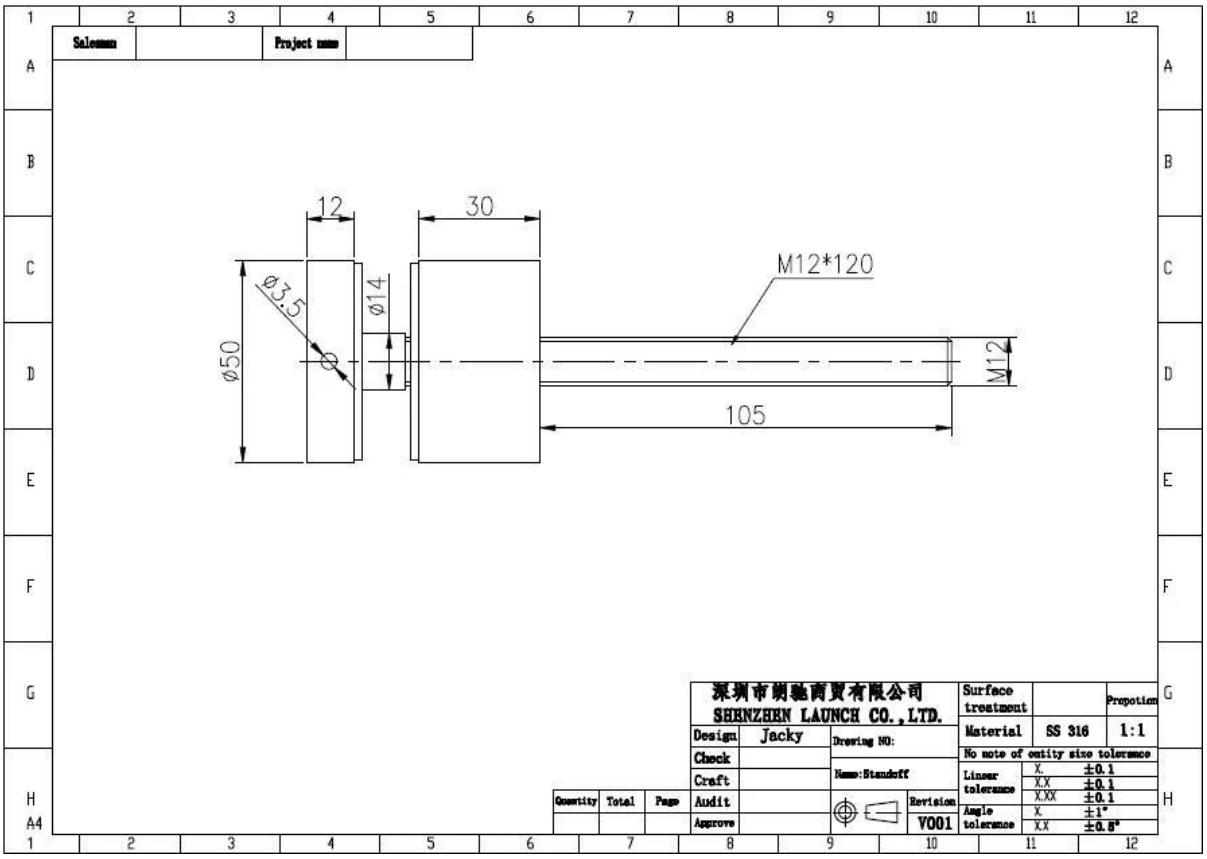
Salesman
Project name
12
30
M12*120
ø3.5
ø14
ø50
M12
105
深圳市朗驰商贸有限公司
SHENZHEN LAUNCH CO.,LTD.
Design
Jacky
Check
Craft
Audit
Approve
Drawing NO:
Name:Standoff
Quantity
Total
Page
Revision
V001
Surface treatment
Material
SS 316
Propotion
1:1
No note of entity size tolerance
Linear tolerance
X. ±0.1
X.X ±0.1
X.XX ±0.1
Angle tolerance
X. ±1°
X.X ±0.5°
A4

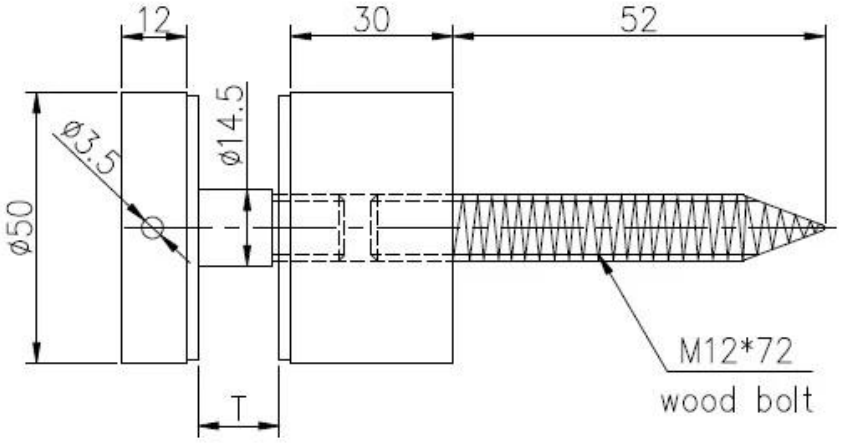
12
30
52
ø3.5
ø14.5
ø50
M12*72
wood bolt
T

深圳市朗驰商贸有限公司
SHENZHEN LAUNCH CO.,LTD.
Design
Jacky
Check
Craft
Audit
Approve
Drawing NO:SF-60
Name:Standoff
Quantity
Total
Page
Revision
V001
Surface treatment
Material
1:1
No note of entity size tolerance
Linear tolerance
X. ±0.1
X.X ±0.1
X.XX ±0.1
Angle tolerance
X. ±1°
X.X ±0.5°

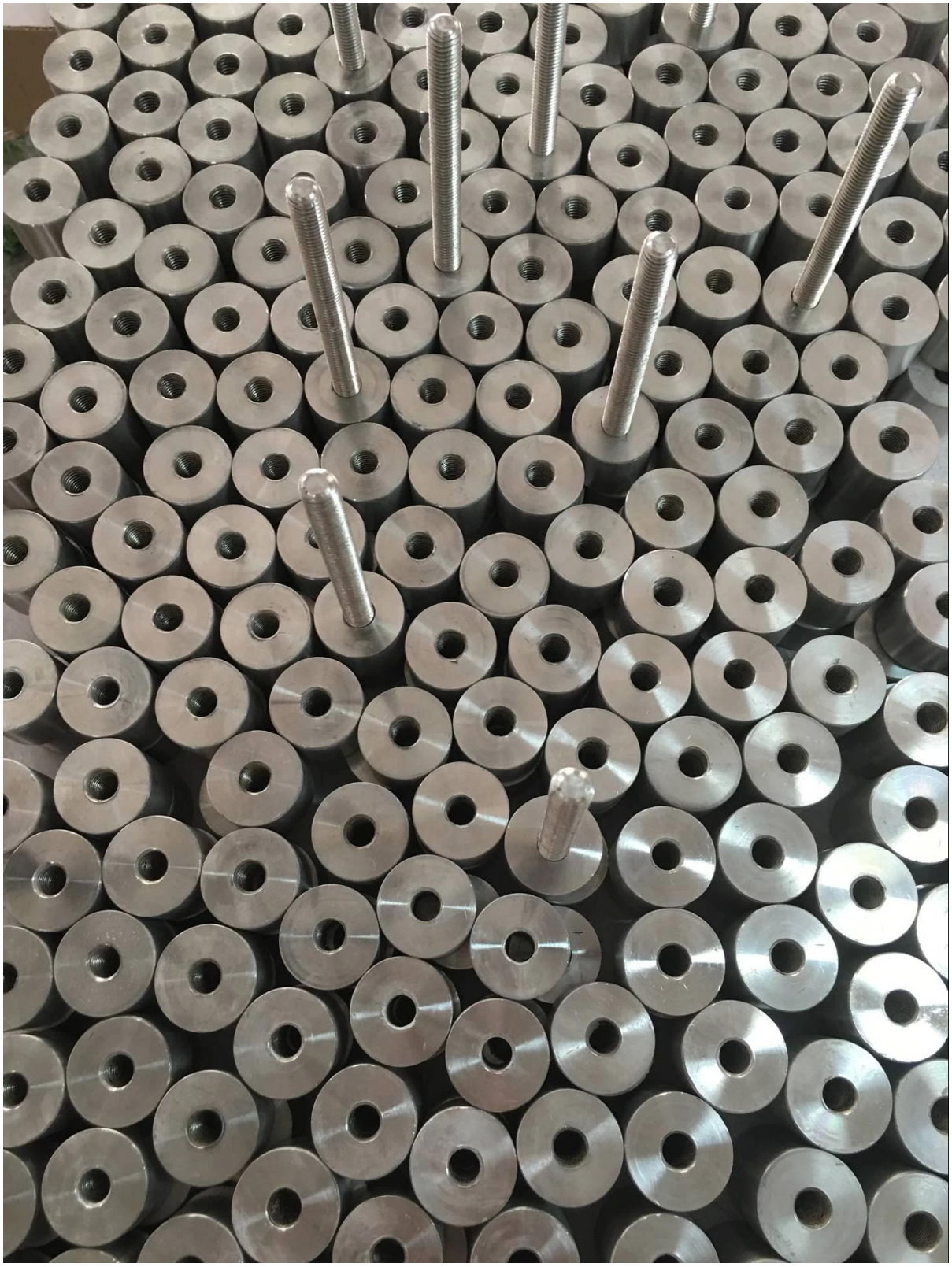

Projectfoto's:

Glazen knop Balustrade systeem RVS balustrade

Roestvrijstalen glazen afstandhouder voor frameloze glazen balustrade

roestvrijstalen standoff, beugel voor glazen panelen, relingontwerp

Bedrijfsinfo:

Shenzhen Launch Co., Ltd was established in 2004, located at Nanshan District, Shenzhen, and one hour by car from Hongkong International Airport. Our main product is high-grade building materials includes stainless steel balustrade post, staircase handrail, balcony guardrail, swimming pool fence and other high-grade building materials. All the products are designed strictly according to the high-end market requirements. We have our own factory in Tangxia Town, Dongguan, has a variety of precision equipment more than 50 sets: CNC lathe, milling machine, punching machine, pipe cutter, argon welder, drilling machine, polisher, etc. which can provide customers with complete product processing services. With the German SPECTRO Spectrometer, we insist on testing every batch of materials to ensure that the material is highly qualified. We also have hardness gauge, secondary element and other test equipment to ensure the products meets customers' requirements.

ABOUT US

OUR ADVANTAGE

Please do not hesitate to contact us if you have any requirement regarding our production lines, you can expect a timely reply with professional solutions!

Own factory, shortest lead time.

Can help customers design product drawings based on customer ideas and design engineering installation drawing according to the customer site sketch.

Sample order, trial order acceptable.

Provide material test report to ensure that the material is qualified.

13 years of industry experience, we can help customers recommend the best solution to help customers save cost.

OUR FACTORY

More than 13 years experience in hardware industry design and processing, we can provide customized services from design to the sample and small batch trial production.

OUR CERTIFICATE

With premium quality, competitive price and superior service, we won a lot of customers' favor.
Our products are popular in North America, European and Australia.

PRODUCTION PROCESS

Casting

CNC lathe

CNC Milling

Stamping

Drilling & Tapping

Polishing

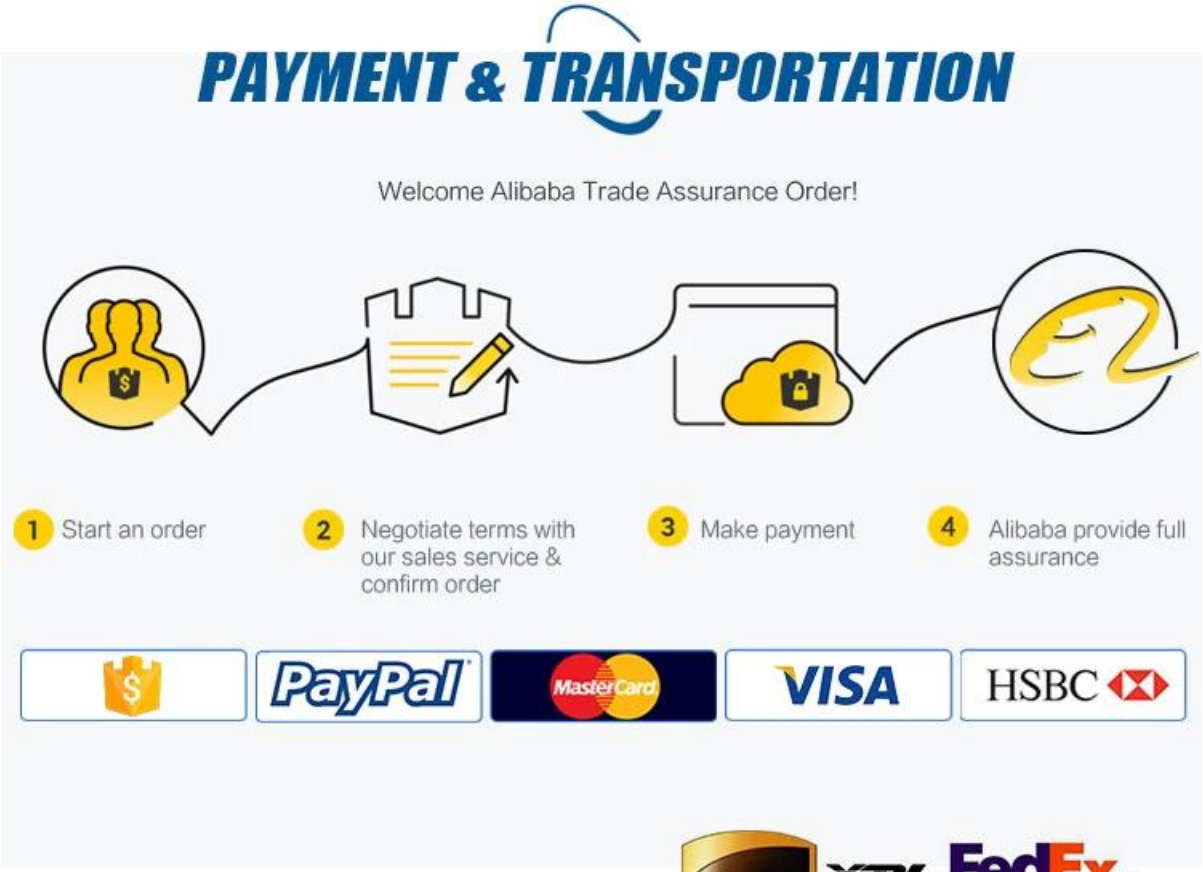

Neem nu contact met ons op voor meer informatie!
E-mail: sales03@launch-china.cn
Mob: +8615907334556