frameless glass balustrade with stainless steel 316 grade mini post is very popular.

This design give you a full view for your pool fence enclosure.

round mini post

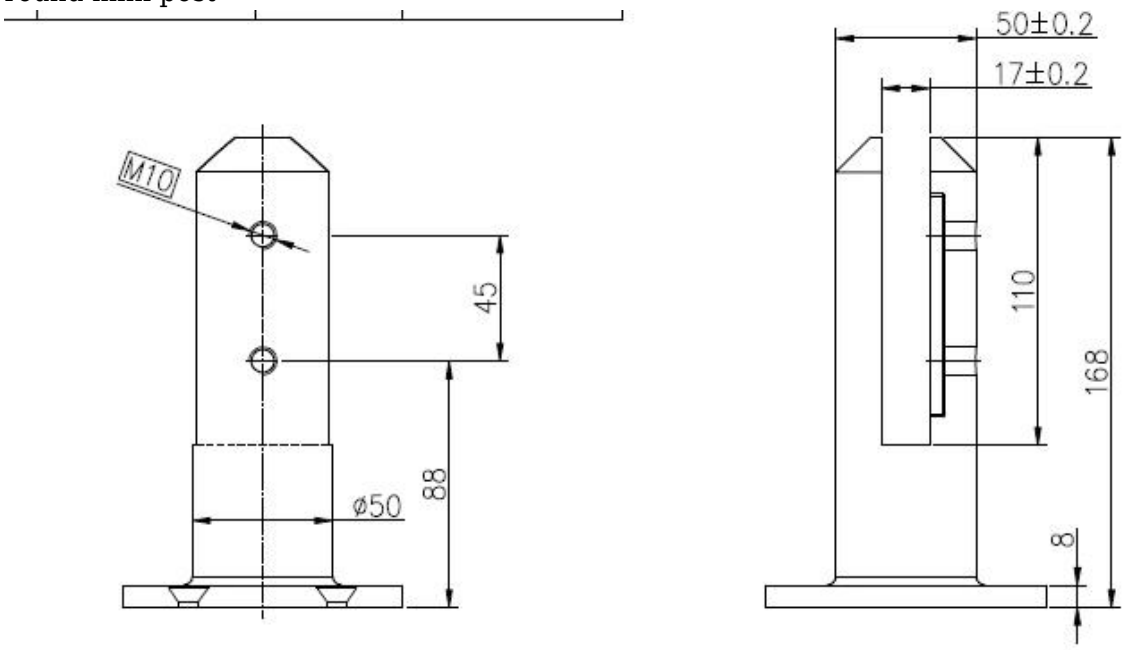

square mini post
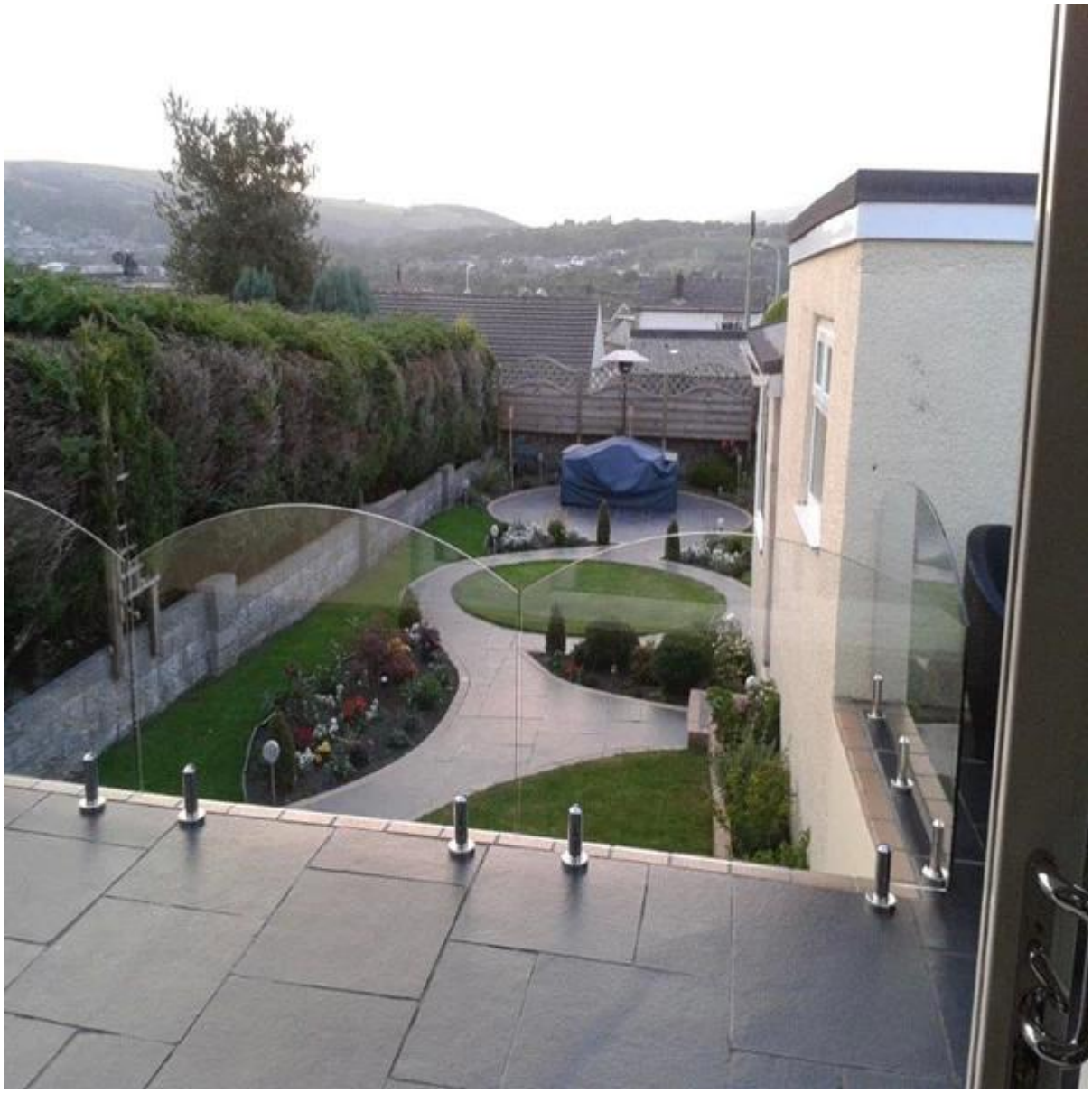
other type mini post core drill