High quality Duplex 2205 materail glass spigot for glass fencing

Glass spigot quick details

Material: Duplex 2205

Model No: SBM

Finish: mirror or satin

Use for 10-13.52mm glass

Glass spigot with base cover

Glass spigot drawing

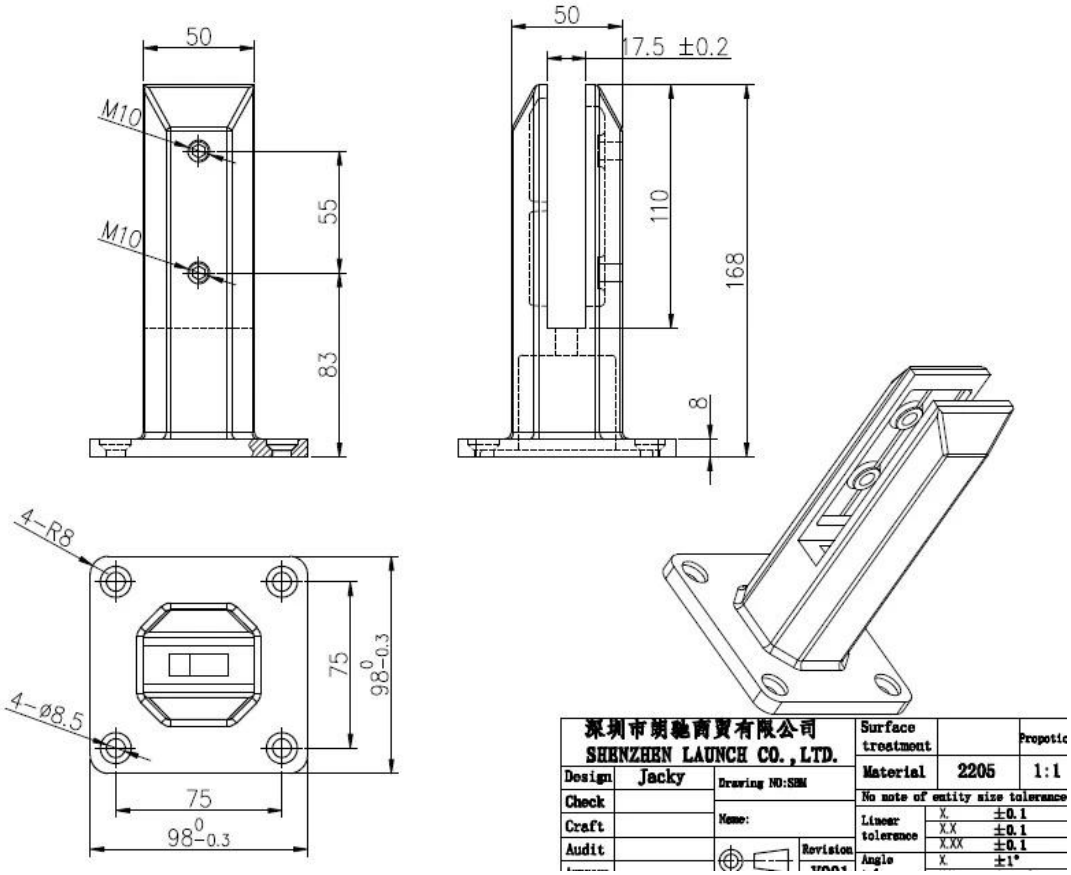

Glass spigot installation:

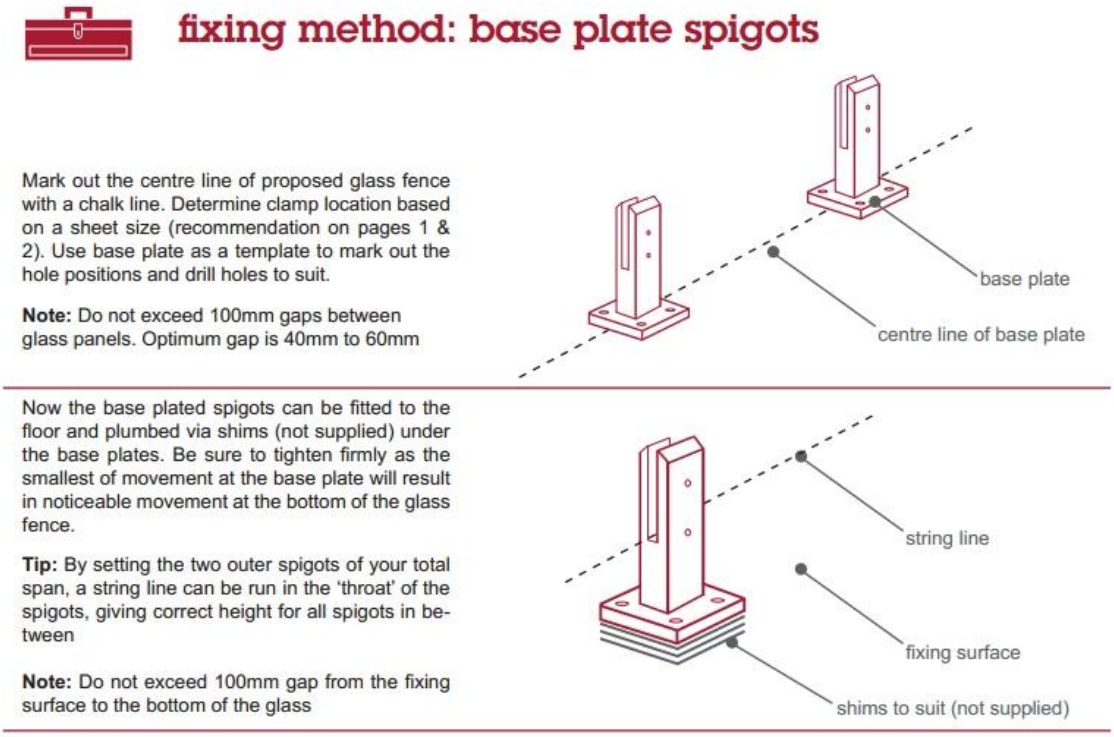

When all spigots are installed, slip domical cover the top of the spigot to hide fixings. It will be necessary to turn the adjustment screws on the spigot face all the way in to allow cover to pass over

Note: Same installation method applies to round base plate spigot

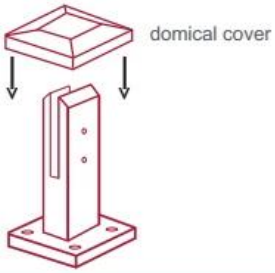

The glass is then installed to the spigots.
Place plastic packers between glass & spigot, at no stage should glass touch the metal

How adjustability works:

1. Place glass in spigot
2. Fix/ tension glass both sides with allen key

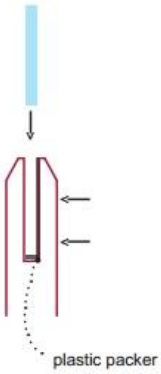

Glass spigot application:

For more details please feel free to send email to sales05@launch-china.cn. Will reply you in 24 hours. Thank you!