Spider Balustrade Post For Balcony Stainless Steel Railing

1. Spider Balustrade Post Specifications :

Material: stainless steel 316 (304 grade is available)
Finish: polished or brushed
Square post size: 50 x 50 x 1.5mm wall thickness (customer size post is available)
End post with 1 way spider fitting
Middle railing post with 2 way spider fitting
Standard Hight: 1100mm (customer post hights available)
Designed for 10-15mm glass or as per your requirement
Adjustable angles stand off design for staircase or balcony etc.

2. Post Dimension Drawing :

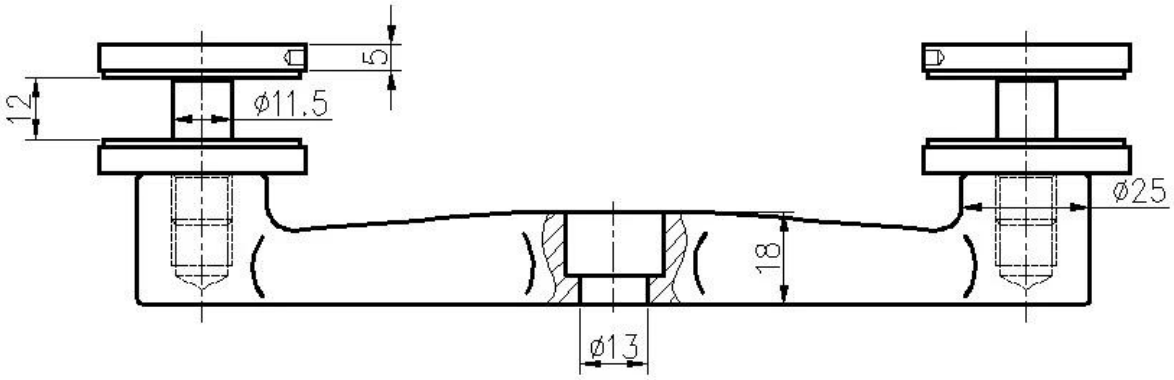

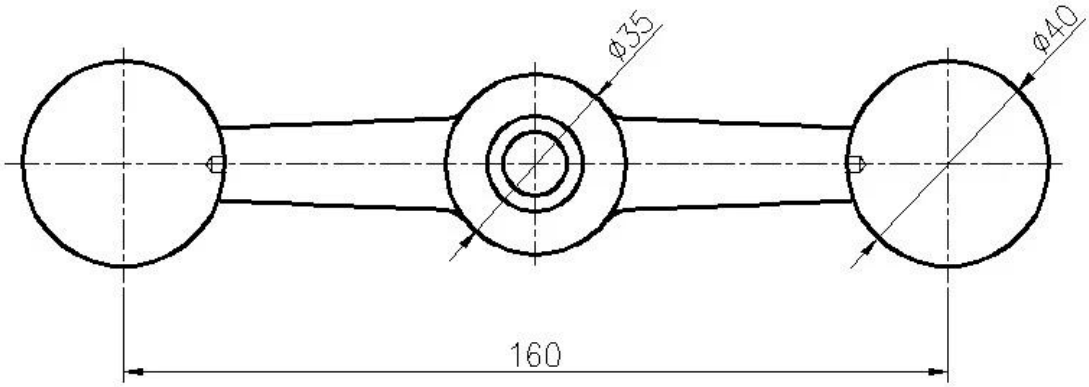

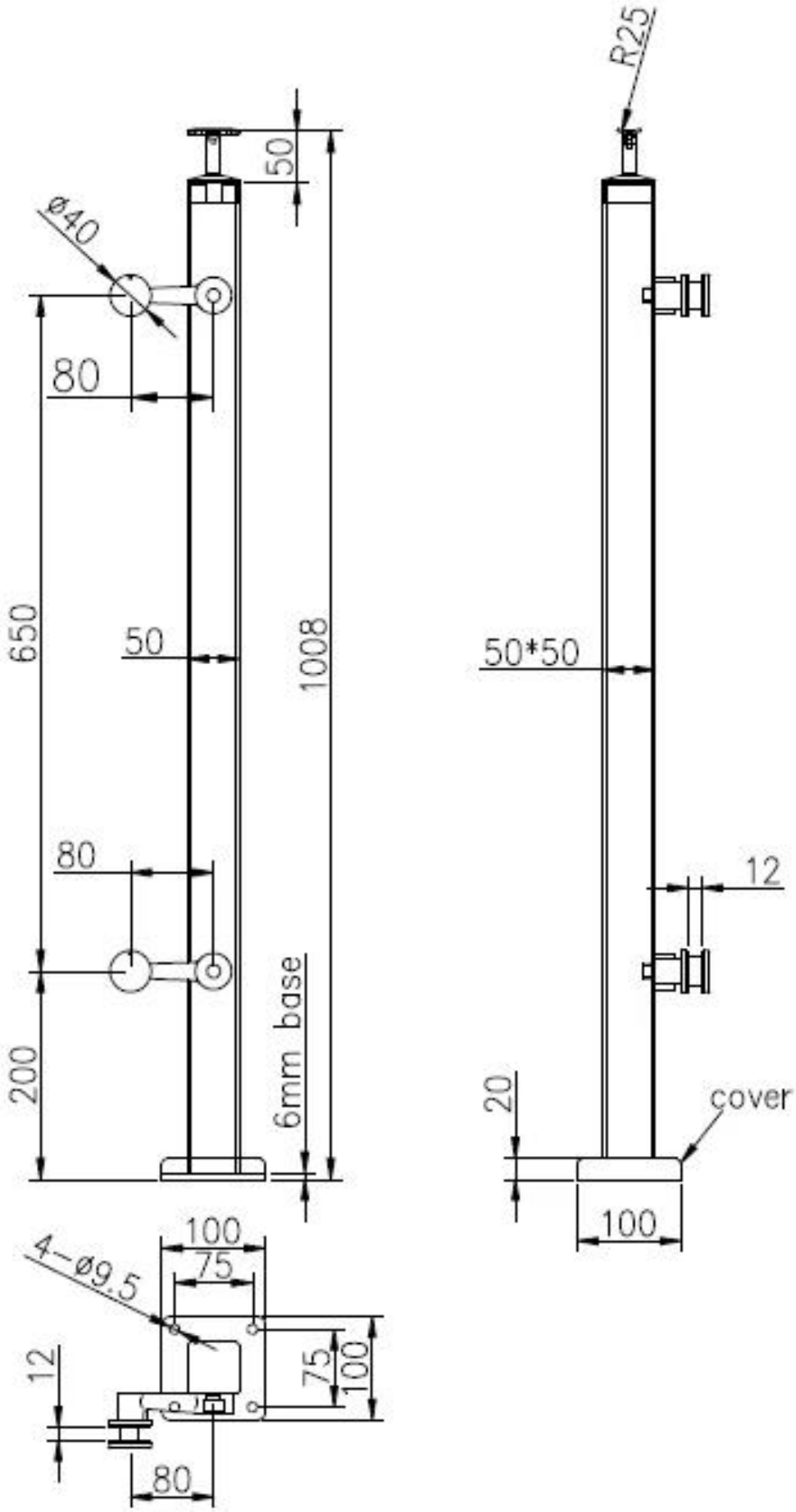
R25
50
ø40
80
650
50
1008
50*50
80
12
200
6mm base
20
cover
100
100
75
4-ø9.5
12
75
100
80

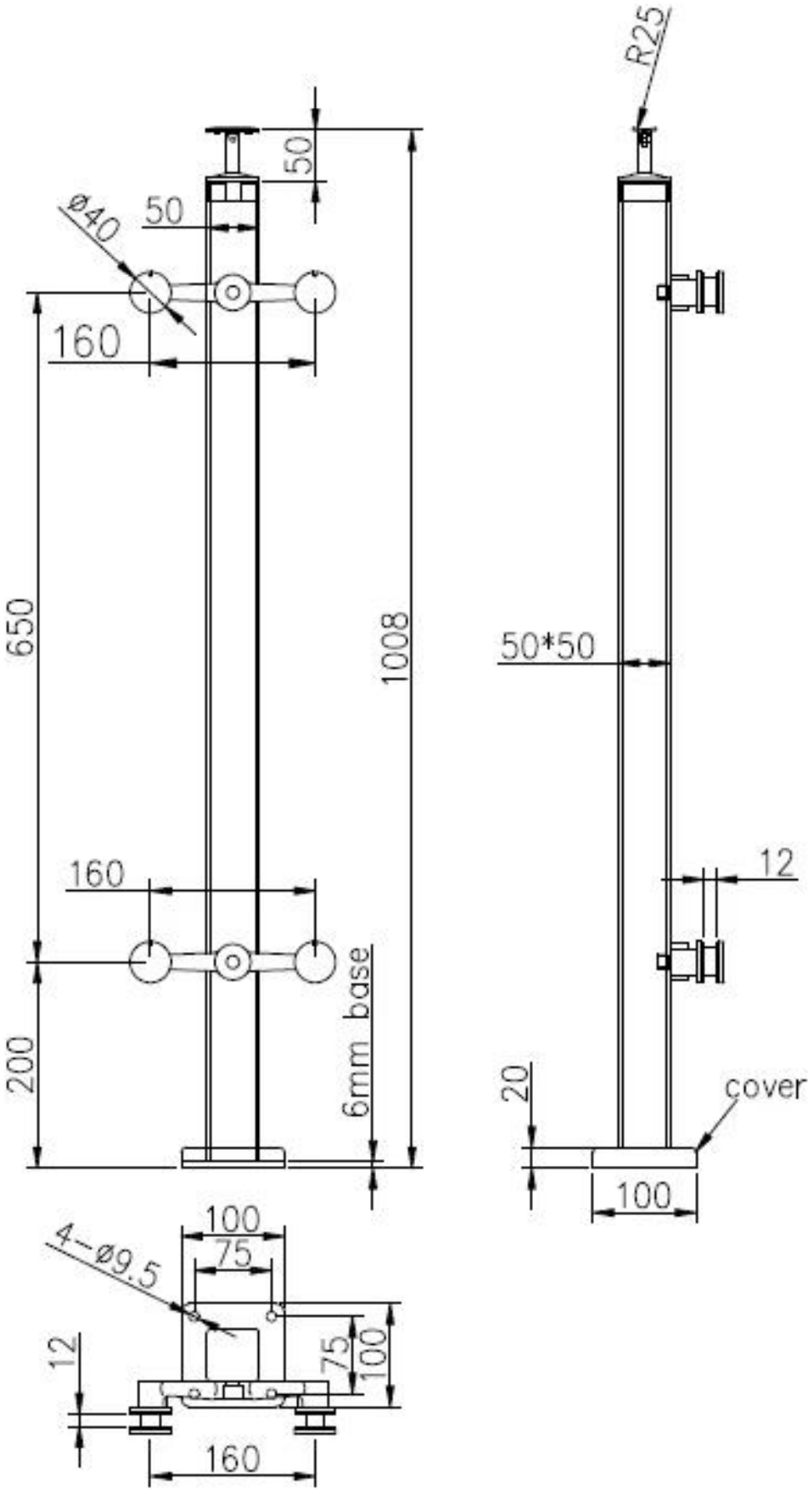

3. Stainless Steel Spider Balustrade Post Photos :

4. Packaging Photos : 1pc/plastic bag, 4pcs/ctn.

If you need price details please contact below email address

Email: sales05@launch-china.cn