Description

--Made of stainless steel 316 (stainless steel 304 is available)
--Polished or brushed finish
--For 10-12mm glass
--Size: 80x35mm
--Net weight: 227g/piece
--For use in 180 degree tempered glass panel
--Minimum order quantity: one piece
--Sample: available
--Customer size glass clamps: available (We are factory)
--OEM products is welcomed

Glass clamp BC-80X35 details

Glass clamps size

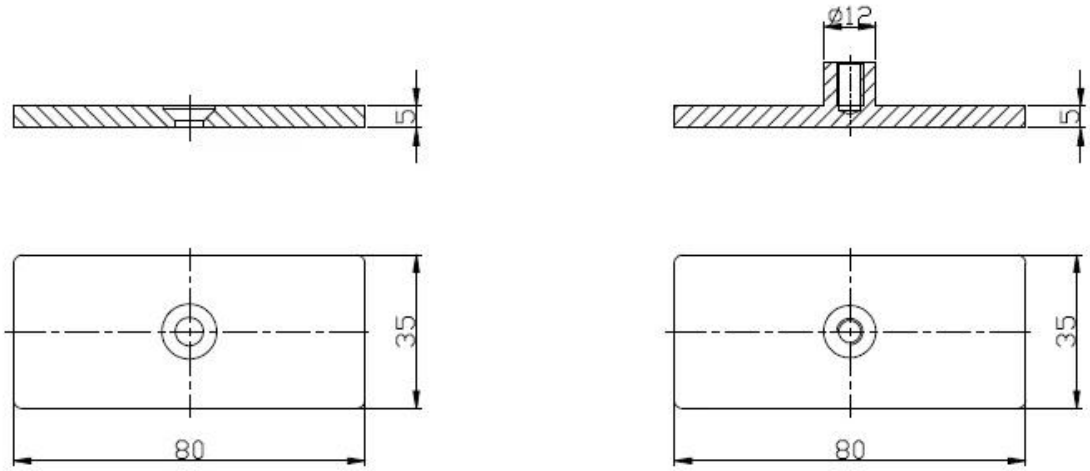

Side view

Project

Delivery & Packing

--Delivery time: 5-7 days by air. 15-20 days by sea.
--Packaging: one pc into one plastic bag, then into one white box, 10 pcs into one carton
--Regular lead time: 7 days if producets are in stock. About 20 days if products are not in stock. It depents on quantity.

Need a quote or any questions, please leave a message.
Or contact me as below info. will get back to you as soon as possible!
For any urgent enquiry, please get in touch on wechat: 973219879 or what's up: +86 13530506265