## Description

--Material: STAINLESS STEEL SHORT POST GLASS RAILINGS
--Finish:
# stainless steel mini handrail post :mirror/satin

--Size
# Stainless steel square post size: 50x50x1.5mm square tube, 50x5mm plate

--For 8-12mm glass(need drill holes on glass)
--For both commerical and modern house home design
--For both wholesale and retail (We are factory)

## Product picture

Details

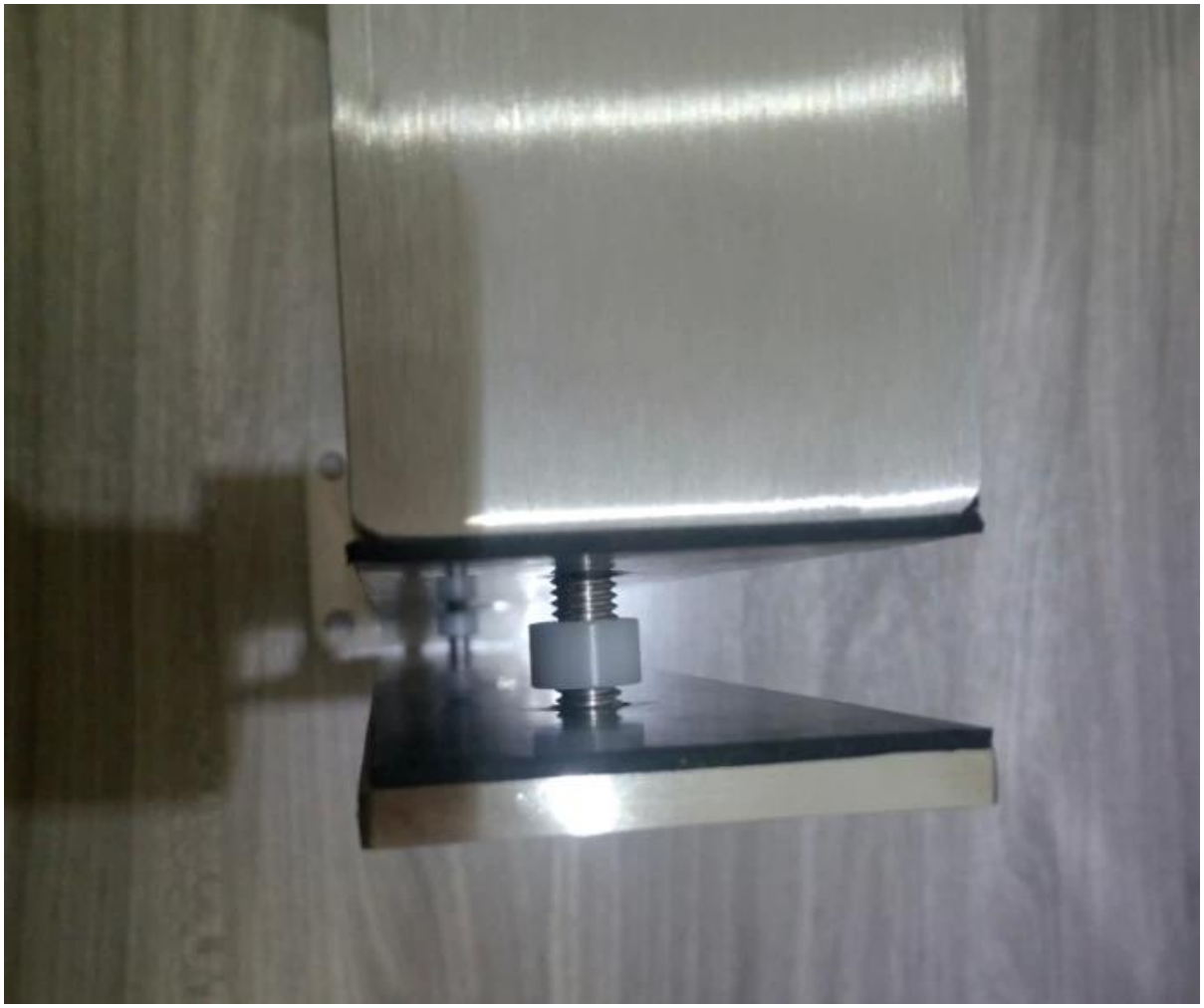

Drawing for stainless steel mini handrail post

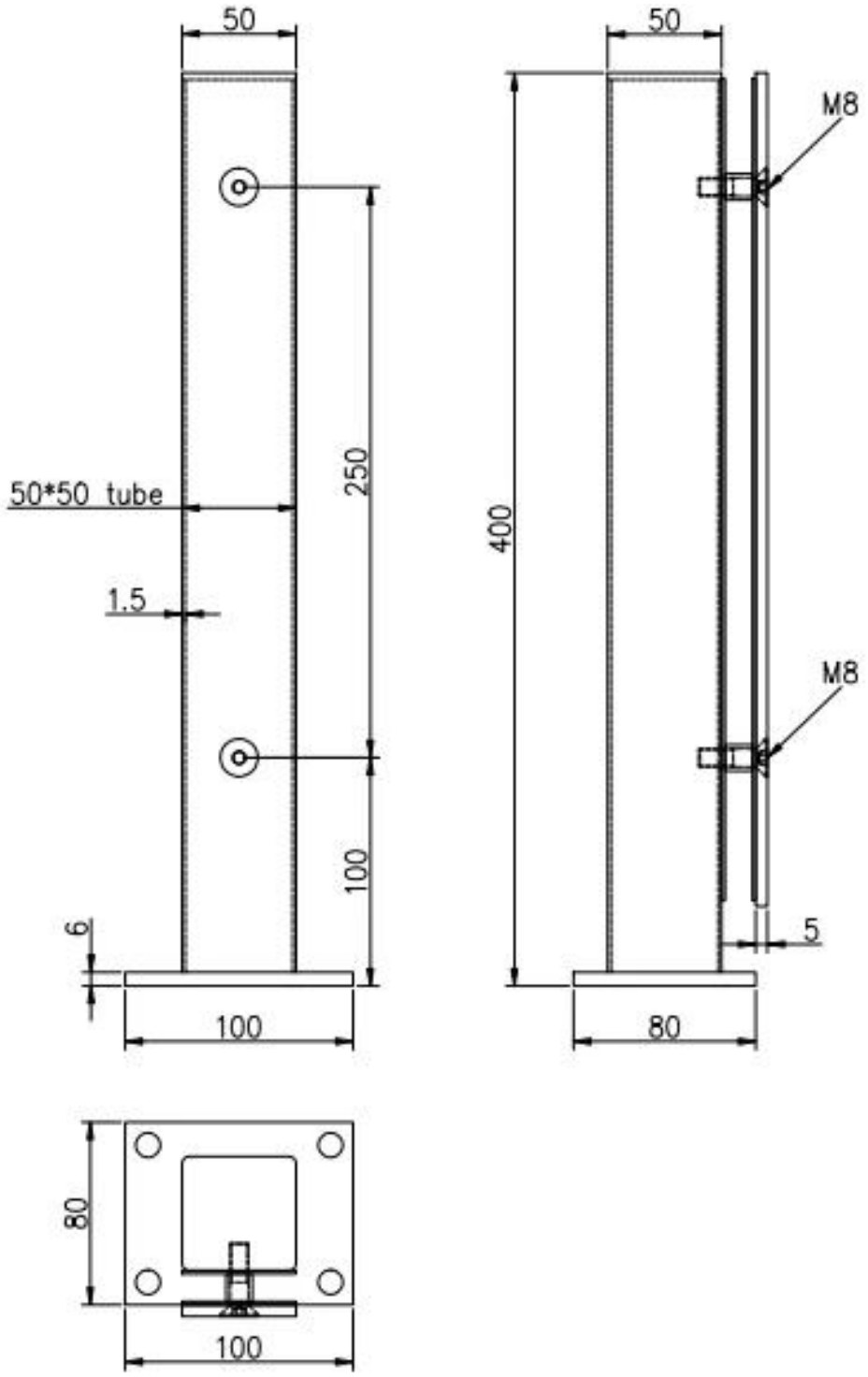


Project show in Canada

## Delivery & Packing

--Delivery: 3-5 days by express. 10-15 days by shipping
--Packing: one pc into one plastic bag, then into one box.
--Regular lead time: about 20 days after payment. ( It depents on quantity)

2013/05/17