Shenzhen launch offers high quality wholesale prices brushed stainless steel 2 inches frameless glass standoff stair
railing , frameless glass standoff stair railing is of modern design and clear look . Our gl ass standoff hardwares for stair railing are approved by SGS inspections , we also provid e mill certifcate of the standoff hardwares for our customers .

Specs. for frameless glass standoff stair railing-

Item	frameless glass standoff stair railing
Dimensions of frameless glass standoff	50*12mm cap , 50*30mm body
Bolt size	M12*120 concrete mount , or M12*72 wood mount , bolt length can also be customized
Accessaries	rubber seals + nylon washer
Glass hole size	16mm
Material	304/316 stainless steel
Finish	brushed or polished
MOQ	10-50 pcs
Lead time	1-3 weeks , depending on quanity
Payment options	T/T ; Paypal

SF-50 concrete mount frameless glass standoff -

satin finish

mirror finish-

Drawing -

Standoff with concrete bolt, # SF-50

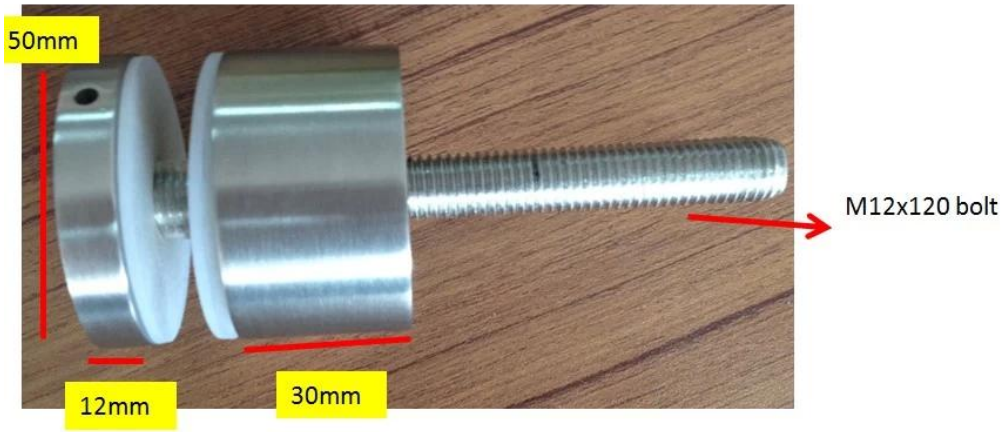

Standoff with wood screw , # SF-50A

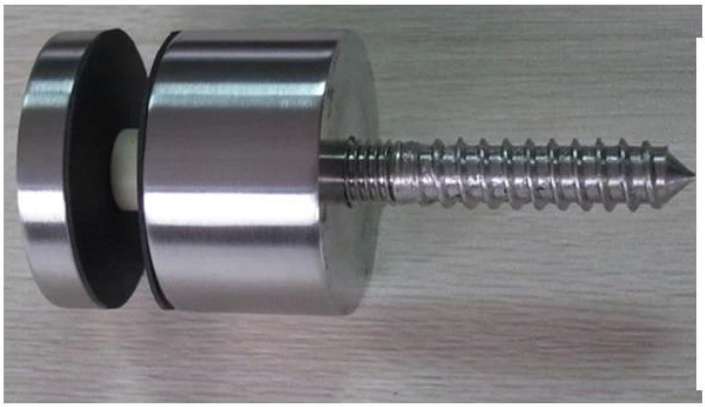

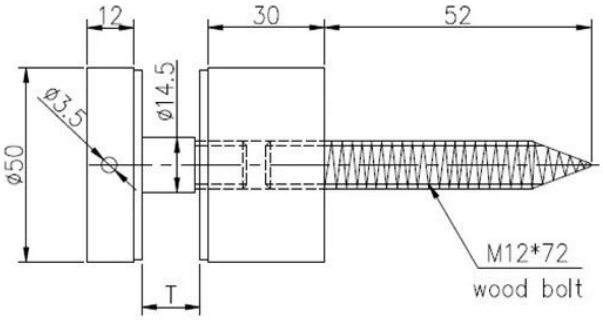

wood mount frameless glass standoff stair railing -

Mass production photos of glass standoff -

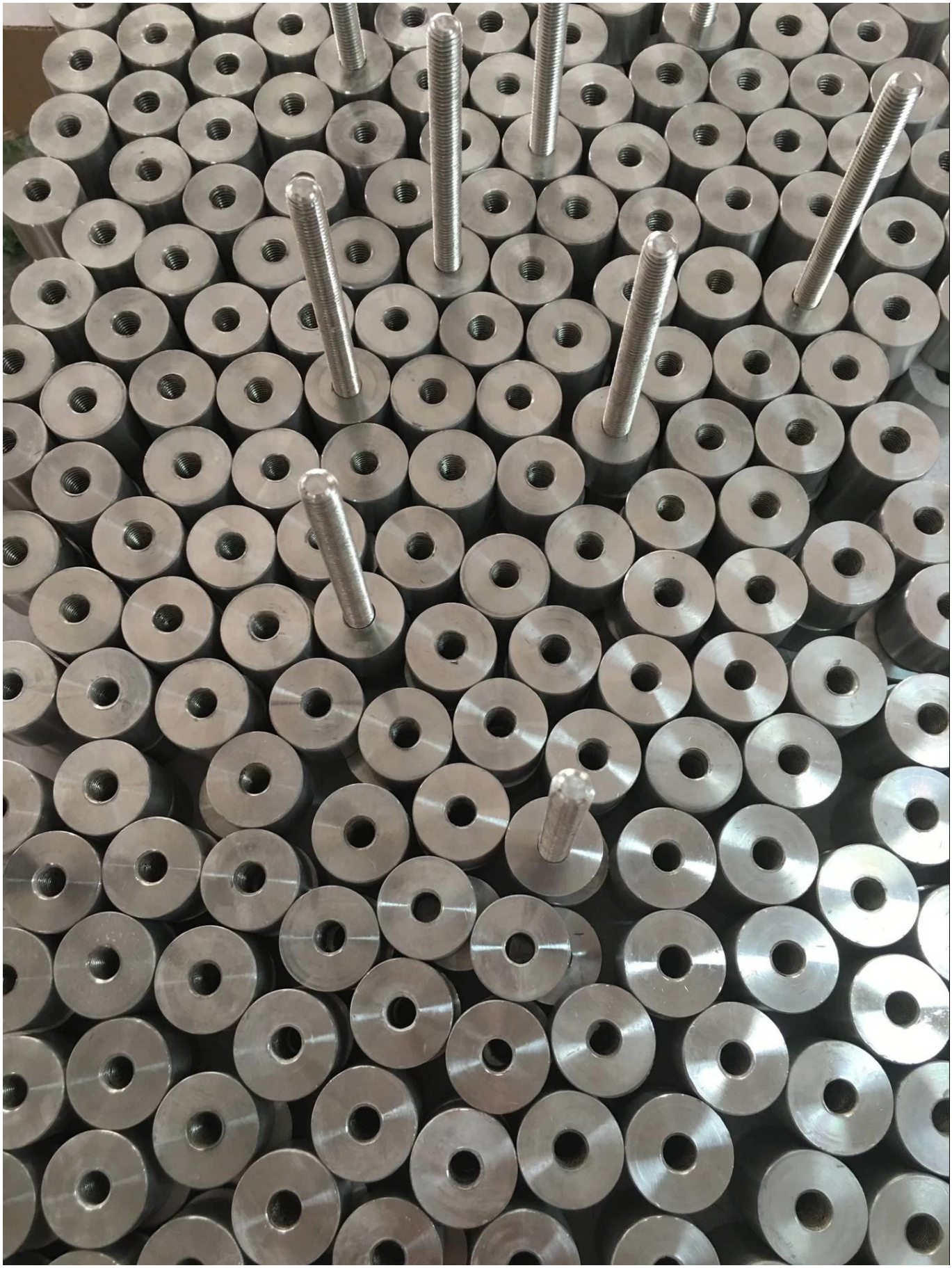

Packing photos of frameless glass standoff stair railing -

13
2013/12/03

We also have other sizes of glass standoff available , please click glass standoff models to get more information .

Project photos of frameless glass standoff stair railings -

KEBIL科比奥®