cheap price spring hinge for swimming pool fencing , G-G1

Features for cheap price spring hinge for swimming pool fencing

- Model NO. G-G1
- glass to glass spring hinge
- 316 stainless steel
- mirror or satin
- made by stamping

photos for cheap price spring hinge for swimming pool fencing

Glass to glass spring hinge

glass to round post spring hinge

glass to wall hinge

Hole cut drawings for stainless steel glass door hinge

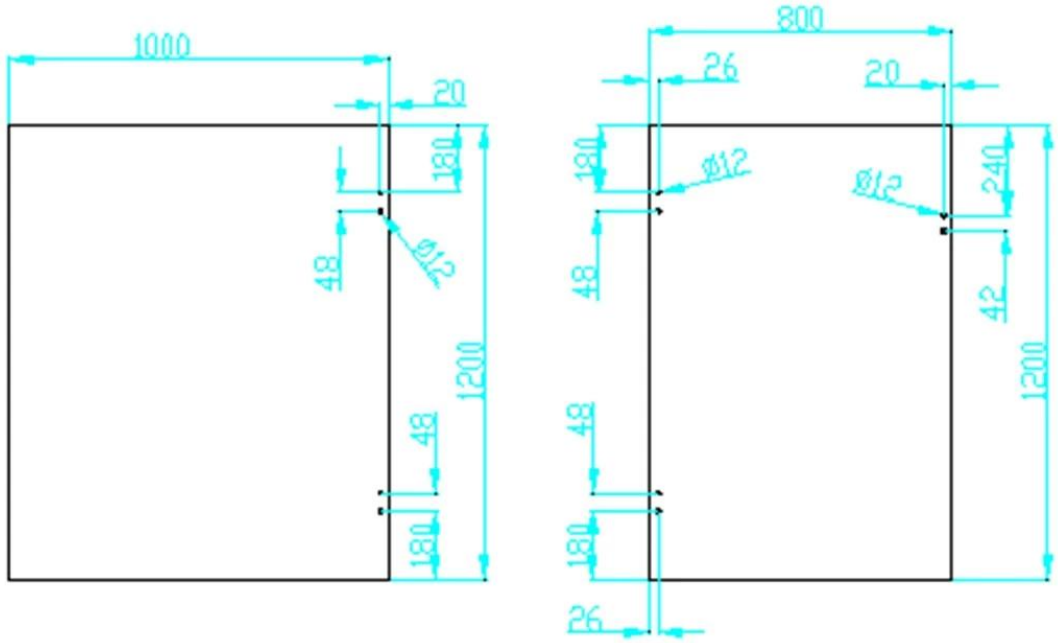

Packing photos for cheap price spring hinge for swimming pool

fencing

project photos for cheap price spring hinge for swimming pool fencing

Contact us for price quote Now !