Matt black mini slot rail tube or top handrail tube for 12mm glass fence

Quick details:

Item name: mini slot rail tube

Material: stainless steel 316

Finish:matt or bright

Use for 10-12mm glass fence

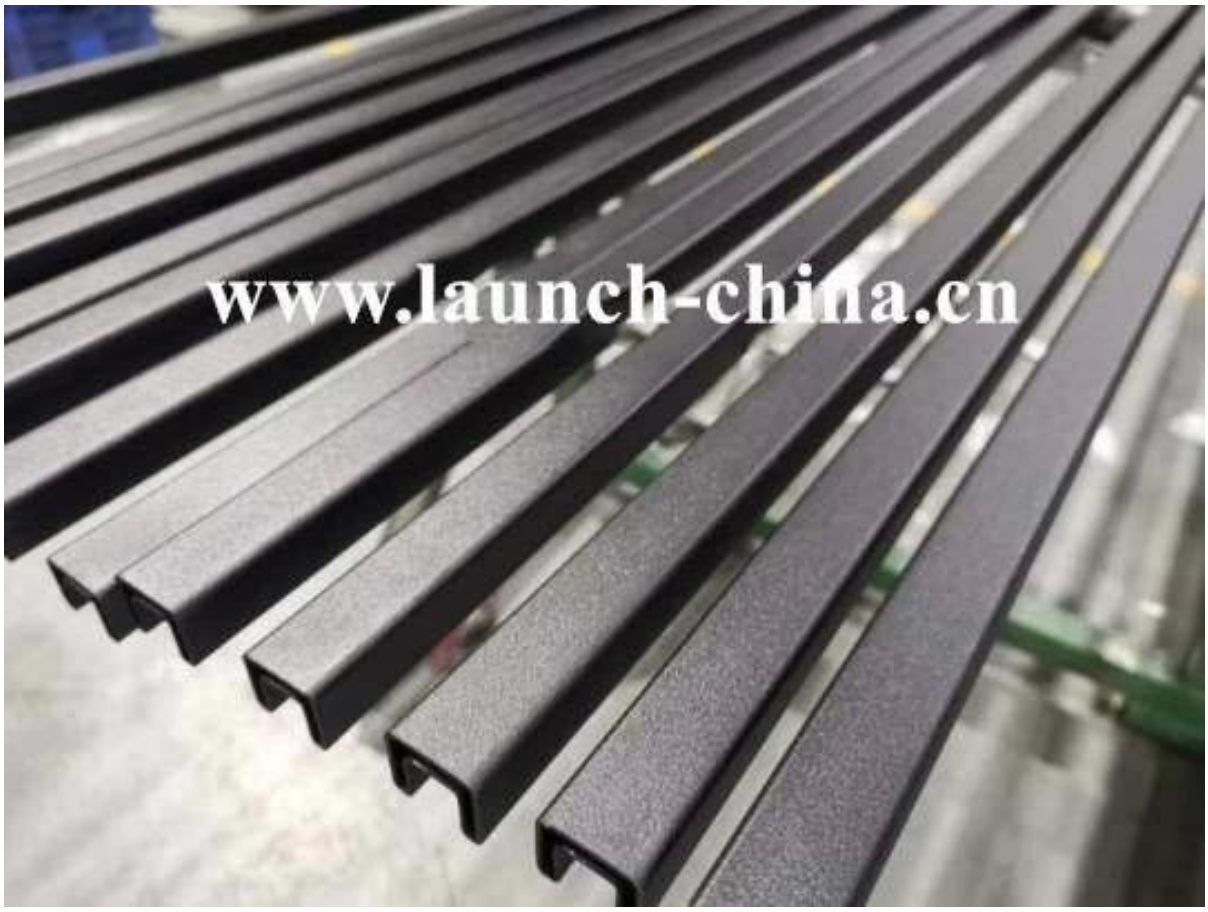

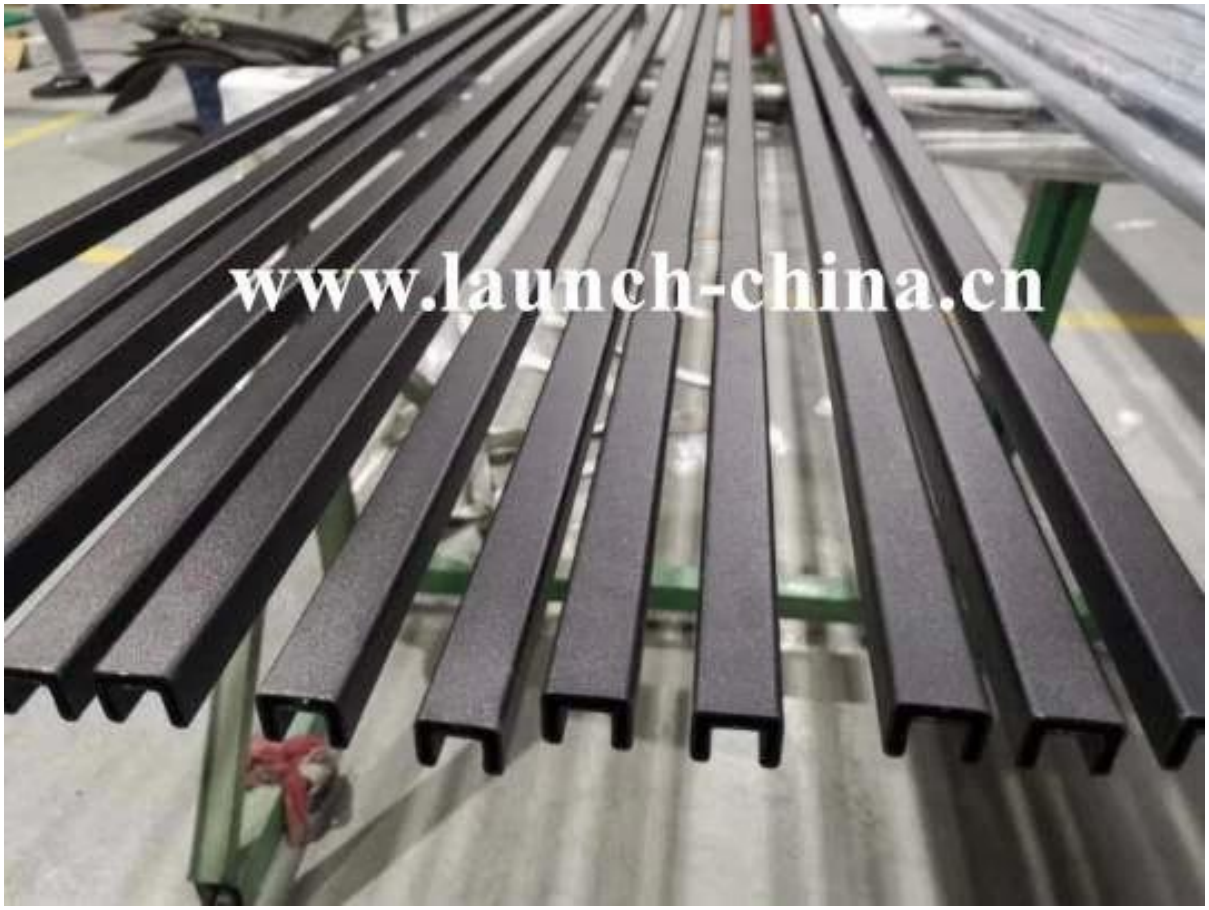

Drawing:

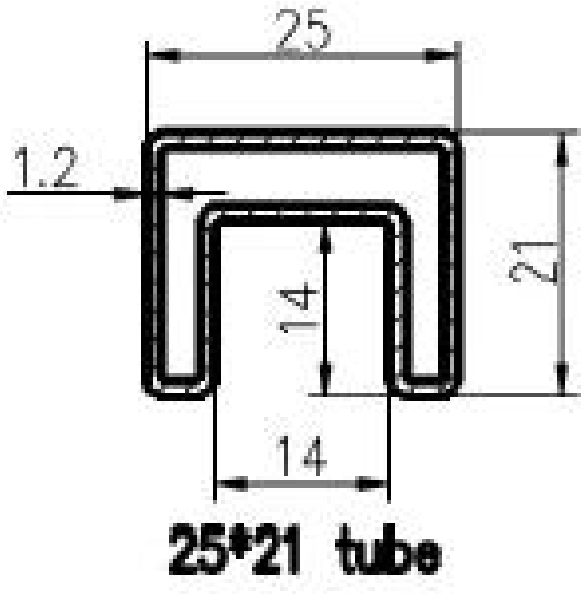

For more details please feel free to connect us!