SS304/316 inox round tube corner connector 90 degree Casting 42.4mm 50.8mm

Model No.: E302 (90 degree)

Model No.: E306 (135 degree)

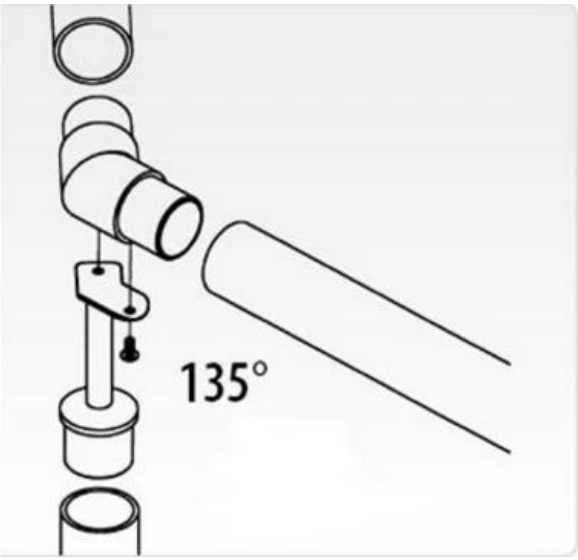
135°

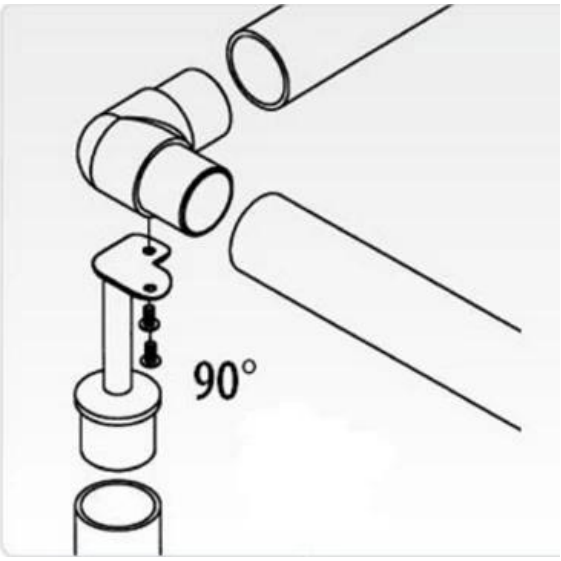
90°

Project show:

Related products:
Square tube connectors:

Please feel free to contact us for more information:

Email: sales03@launch-china.cn
Mobile: +8615907334556