stainless steel pool fencing spigots

frameless pool safety fencing and balustrade system protect children and pets from entering an enclosed area.

Temepred glass railing makes all activities around the pool visible. We use tempered safety glass that is tough and impact resistant. Tempered galss is much stronger,durable and heat resistant than regular glass.

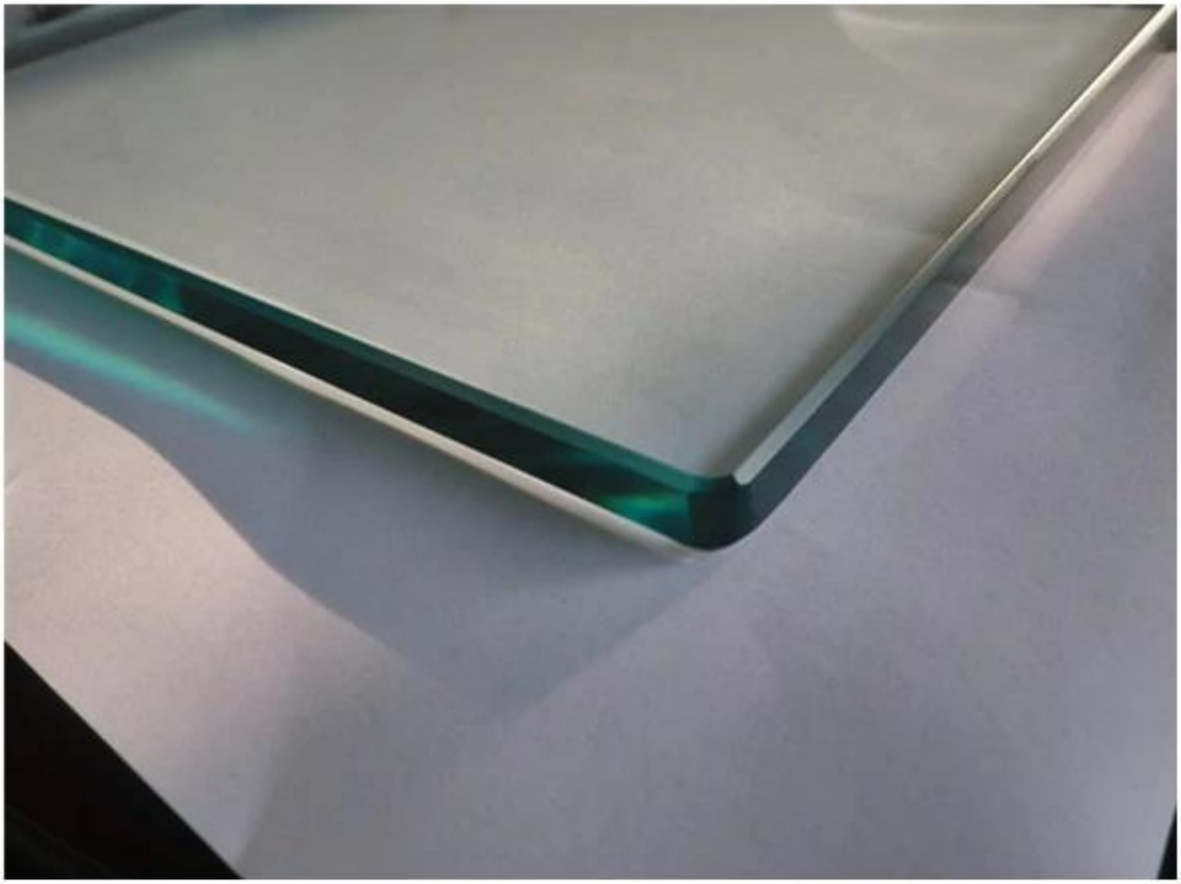

In addition,the glass gate has self-closing hinges and latches to ensure the gate cannot accidentally be left open.

Please click below link to know more about glass latch
china stainless steel glass latch for pool fencing

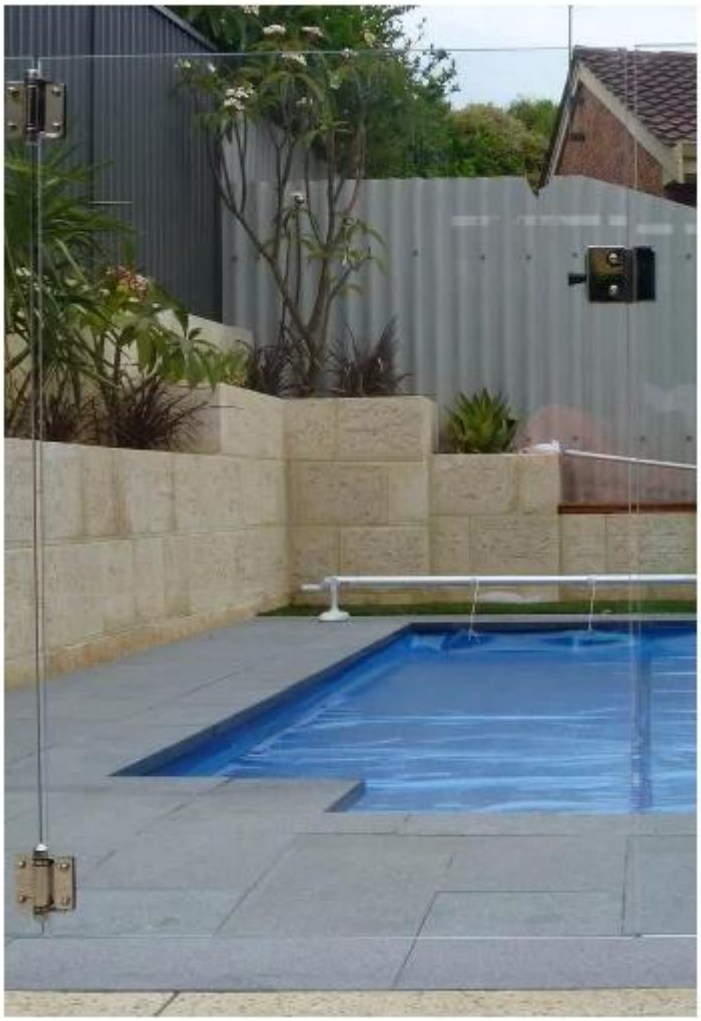

Detailed information about glass fencing spigots

product name	glass pool fence spigot
type1	base plate spigot
type2	core drill spigot
material	SS316 grade/duplex2205
finish	brushed and mirror
glass thickness	10-13.52mm
application	balcony and pool fence
techonology	casting
net weight	about 2kg
spigot height	168-286mm
related fitting	cover,expansion bolt,screw,silicon rubber
other pool fencing hardware	glass hinge and latch

drawing of round glass spigot

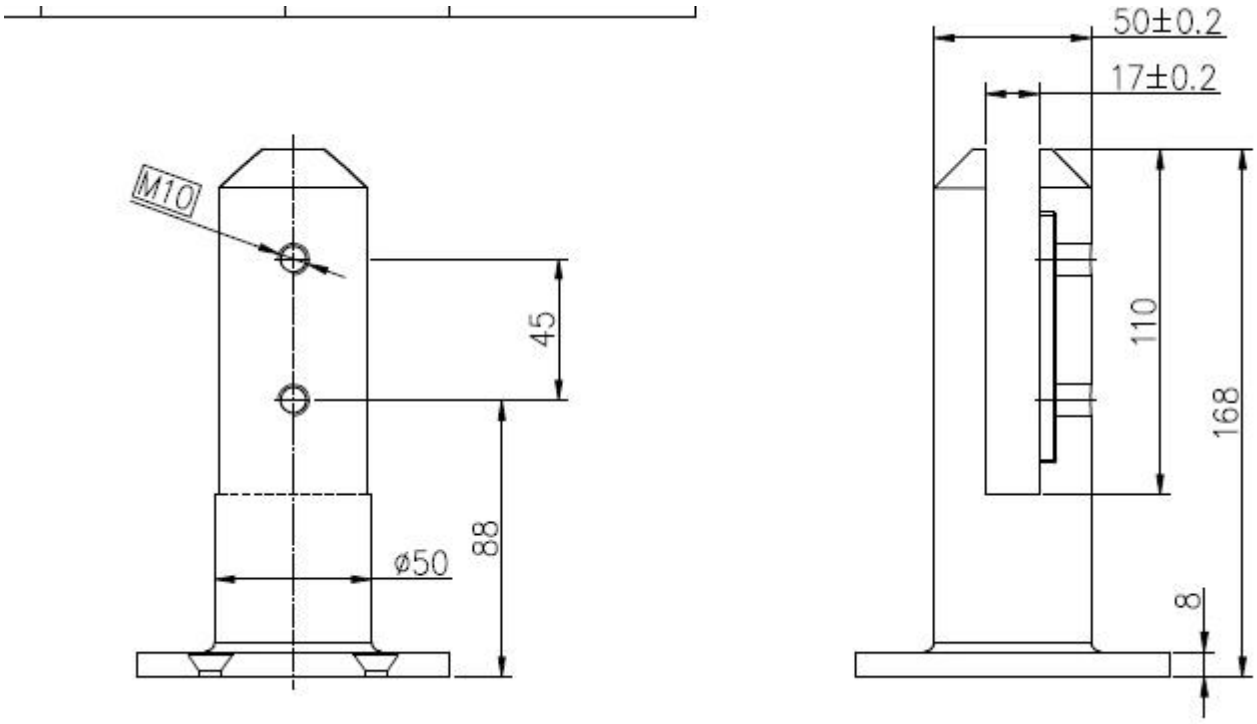

product show:

[round base plate glass spigot]

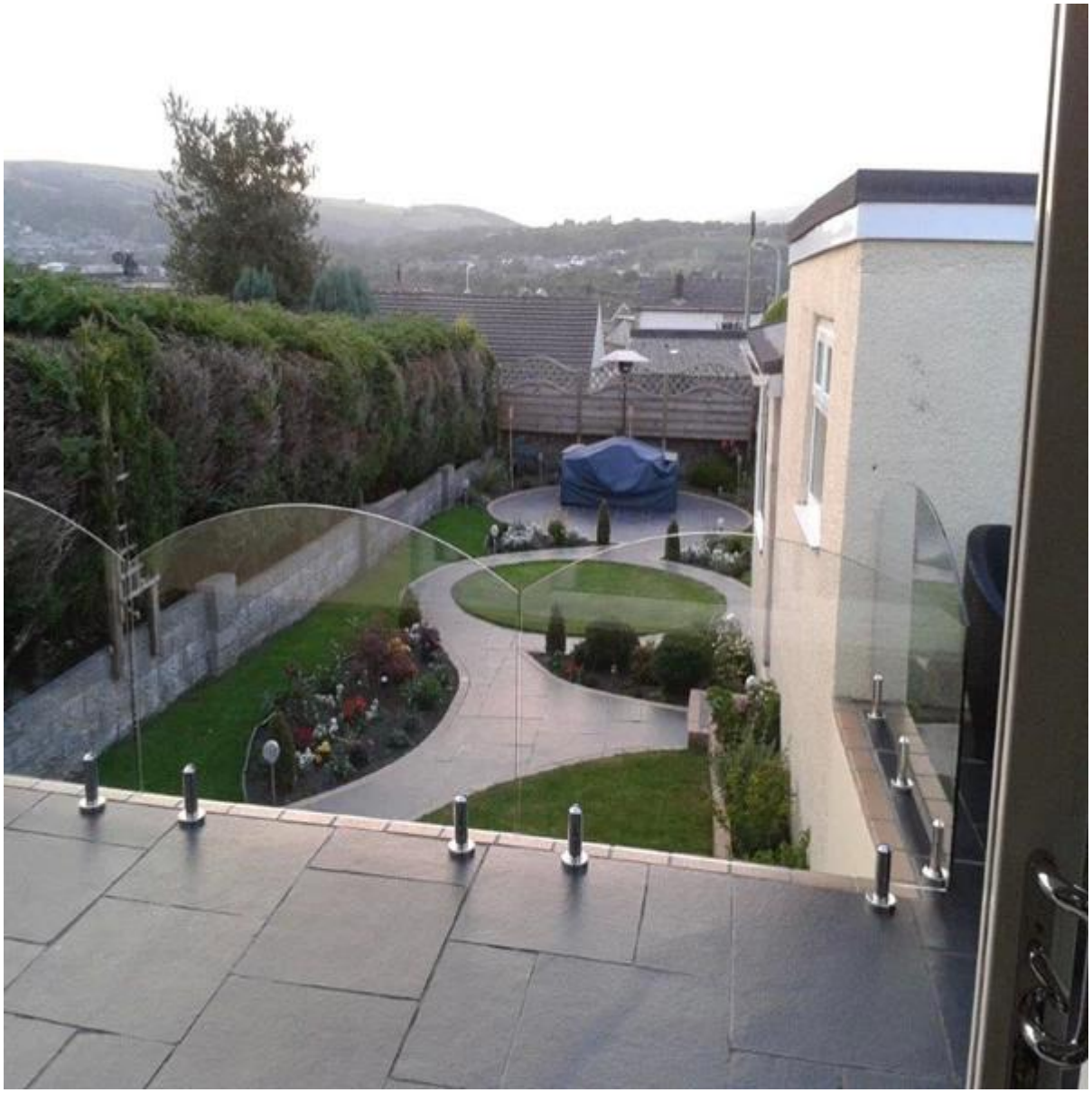

Other types of glass spigots
please click below link for details about square glass spigot
china stainless steel 316 base plate glass spigot for pool fencing

RBM

core drill type glass spigot

SCM

glass to glass hinge

G-G2

glass to wall hinge

G-W2

glass to round post hinge

G-P2

we specialize in pool fencing glass spigot , gate hinge , glass latch , glass railing , cable railing ,welcome to contact me for details.