crimpers لا حاجة ، swageless موتر كابل ، mm الفولاذ المقاوم للصدأ كابل حديدي كابل الموتر الكابلات ل3-5 316 الهيدروليكية.

Feautures-

بند	كابل الدرابزين الأجهزة ، الموتر كابل
قطر الكابل	3mm 4mm 5mm
الوضعية	آخر الصلب / آخر الخشب
نوع	swageless
مواد	SSالفولاذ المقاوم للصدأ / 304 316
موك	50 زوجا

- T803 صور من كابل التوتر

الموتر كابل مع الترباس / المسمار الخشب T803

T803

الموتر كابل الرسم المواصفات T803.

Model: T803

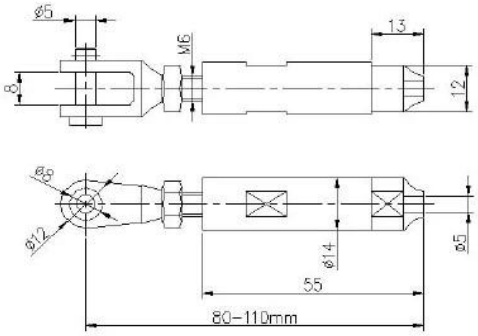

SWAGELESS TYPE CABLE TENSIONER

- لدينا أيضا أنواع أخرى من الموتر كابل لاختيارك
الموتر كابل ، لكابلات 4-5 T804 mm

وذلك أساسا للكابلات الصغيرة قطرها 3 mm ، tenioner كابل T807A

- صور المشروع للسلك الكوابل مع شدادات الكابلات

Project Photos

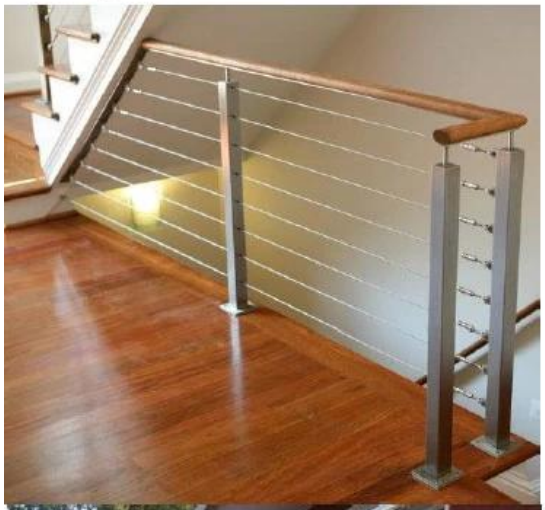

-ملف الشركة

Shenzhen Launch Co., Ltd was established in 2004, located at Nanshan District, Shenzhen, and one hour by car from Hongkong International Airport. Our main product is high-grade building materials includes stainless steel balustrade post, staircase handrail, balcony guardrail, swimming pool fence and other high-grade building materials. All the products are designed strictly according to the high-end market requirements. We have our own factory in Tangxia Town, Dongguan, has a variety of precision equipment more than 50 sets: CNC lathe, milling machine, punching machine, pipe cutter, argon welder, drilling machine, polisher, etc. which can provide customers with complete product processing services. With the German SPECTRO Spectrometer, we insist on testing every batch of materials to ensure that the material is highly qualified. We also have hardness gauge, secondary element and other test equipment to ensure the products meets customers' requirements.

ABOUT US

OUR ADVANTAGE

Please do not hesitate to contact us if you have any requirement regarding our production lines, you can expect a timely reply with professional solutions!

Own factory, shortest lead time.

Can help customers design product drawings based on customer ideas and design engineering installation drawing according to the customer site sketch.

Sample order, trial order acceptable.

Provide material test report to ensure that the material is qualified.

13 years of industry experience, we can help customers recommend the best solution to help customers save cost.

OUR FACTORY

More than 13 years experience in hardware industry design and processing, we can provide customized services from design to the sample and small batch trial production.

OUR CERTIFICATE

With premium quality, competitive price and superior service, we won a lot of customers' favor.
Our products are popular in North America, European and Australia.

PRODUCTION PROCESS

Casting

CNC lathe

CNC Milling

Stamping

Drilling & Tapping

Polishing

PACKAGING & DELIVERY