□□□□□□□ □□□□□□ □□ □□□□□ □□□□ □□□□□□□ □ □□□□□ □□□ □□□□□□□ □□□□□□□□ / □□□□□□□□ □□□□□□□ □□□□□□□.

1). □□□□□ □□□□□□□□□ □□□□□-

- □□ 40 * 40 □□□□□□□ □□□□□□□
- □□ 40 * 80 □□□□□□□ □□□□
- □□ 19 * 19 □□□□□□ □□□□□ □□□□□
- □□ 32 * 32 □□□□□□□ □□□□□□□ □□□□□□□□ □□□□□□ □□□□□□□ □□□□□

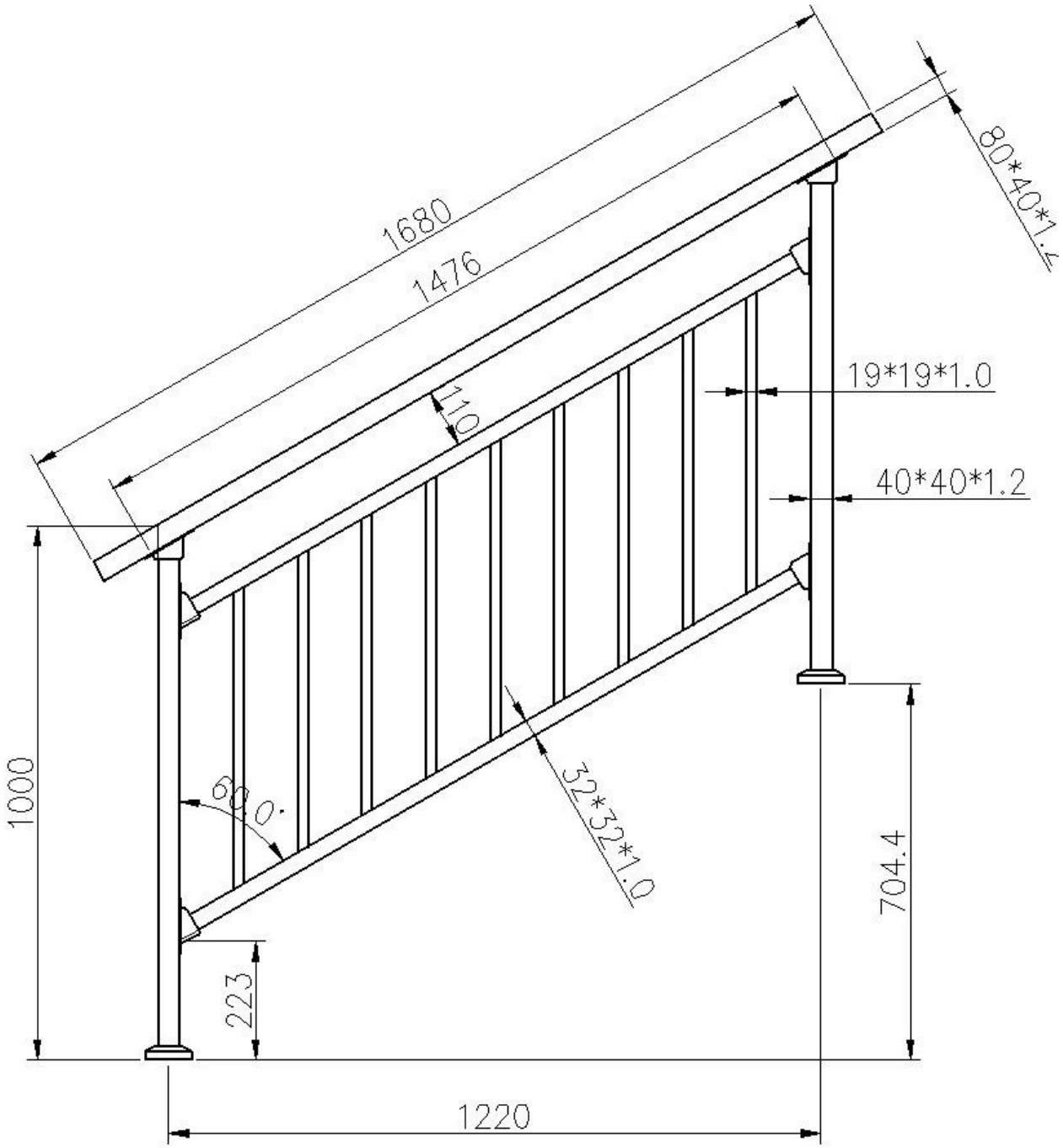

□□□□□□ □□□□□ □□□ □□□□□ □□ □□□□□□□□ □□□□□□□ □□ □□□□□□-

Item	Specs.	Shape	Remark
Handrail (mm)	80x40		optional
	60x30		
	70x30		
	93x45		
	80x40		
	80x40		
	60x40		
	60x60		
	50x50		
	60x40		

Item	Specs.	Shape	Remark
Main Post	40x40 50x50		optional
Middle/Bottom rail	32x32 35x35 40x40 45x45		
	40x30		
Small vertical post	19x19 16x16 22x22 25x25		
	25x12		
	28x20		
	25x18		
	Φ22		
Middle/Bottom slot rai	32x32 35x35		
	40x30		

Item	Specs. (mm)	Shape	Remark
Connector (middle/bottom rail to post)	32x32 40x40 40x30 50x50		optional
water-proof sleeves (for small vertical post)	19x19 16x16 22x22 25x25		
	25x12 28x20		
Rivet screw	M6x15		
corner connector (handrail to handrail to post)	80x40/40		
T shape connector	80x40/40		
post to handrail connector	80x40		
Handrail connection cover	80x40		
Main post base plate	40x40		
Main post base cover	40x40		
handrail cap	80x40		

2). [illegible]

□□□□□□□□ □□□ □□□□□ -

□□□□□ □□□□□ □□□□ □□ □□□□□□□ □□□-

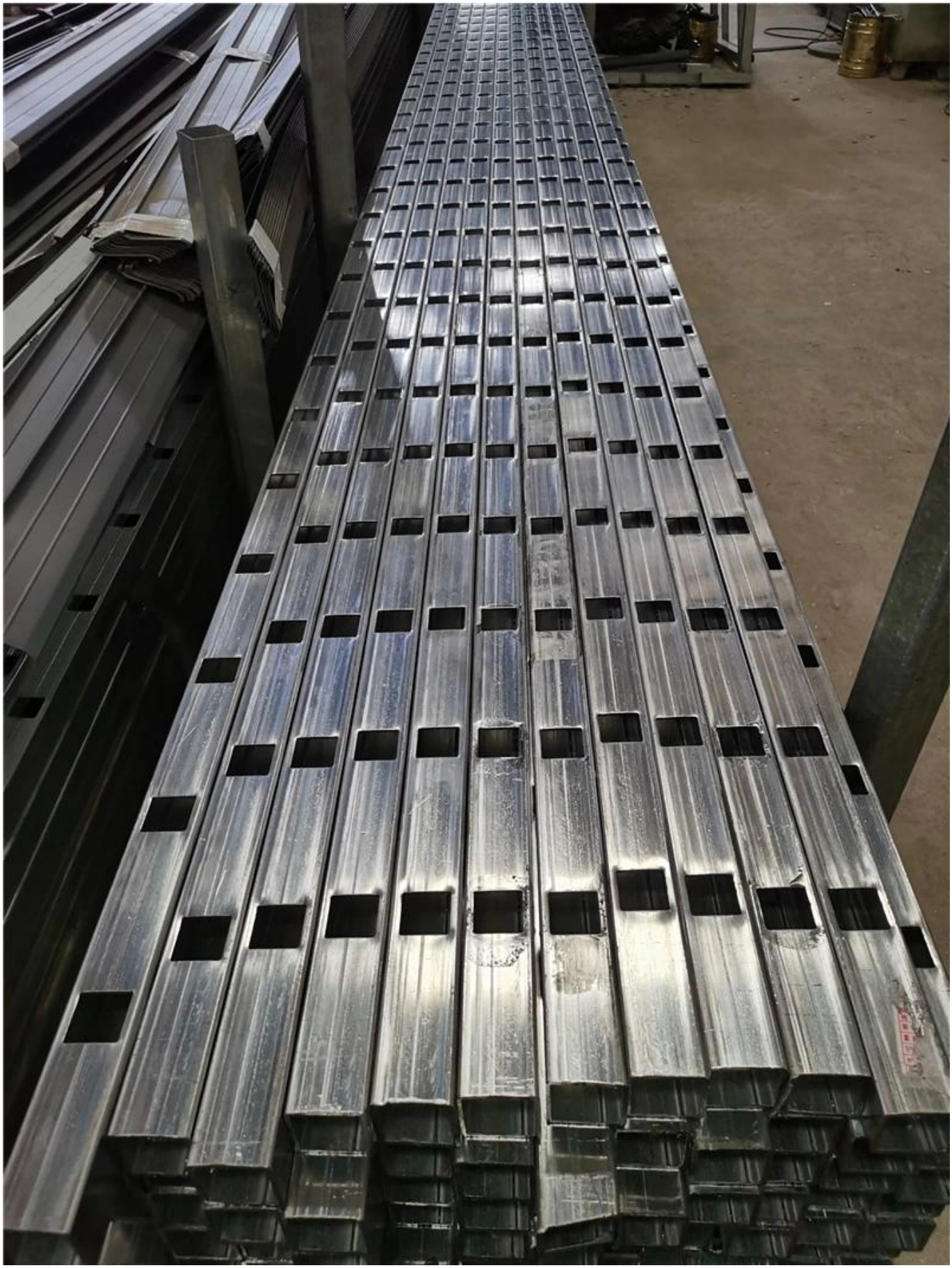

950
950
1050
1050
1050
1100
1100
1100
1150