□□□ □□□□:
□□□□ □□□□□□ □□□□ □□□□□□ □□□□□
□□□□□□ □□□□□ □ □□□□ :□□□□□
□□ :.□□□ □□□□□-G2
1 □□□□□□□ □□□□□ □□□□□□ □□□□□ □□□□□□□ □□□ X Magnetic 2 □ □□□□□ X □□□□ □ □□□□□□□ □□□□□ □□□□□□
.□□□□□□ □□□□□□□ □□□□□□□□ □□□□□□□
□□ □□□□□□□□ □□□□□ □□ □□□□□ □□□□□ □□□□ □□ □□□□□□□ 316 □□□□□□□ □□□□□□ □□ □□□□□ □□□□□□□ □□□□□□□
.□□□□□□□□□
□□□□□ □□□□□□ □□□□□ □□□ 12 / □□□ 10 /□□□ □□□□ 8 □□□□□
□□□□□□□ G-G2 □□□□ □□□□□ □□□□□□ □□□□ □ □□□□
□□□□□□ / □□□□□□ □□□□□□□ □□□□□□ □□□□ □□□□□□ □□□□□□□ □□□□□ □□ 2

G-G2 □□□□□□□ □□□□□:
1 □□□ □□80 □□□□ □□□□ □ □□□□□□ □□
1 □□□□□ □□106.3 □□□□ □□□□ □ □□□□□□ □□

1 □□□□□ □□ 21 □□□□□□□ □□□□□□ □□□ □□□□□□ □□
□□48 □□□□□□□ □□ □□□□□ □□□ □□□□□□□
□□ 20 :□□□□□□□ □□□□ □□□ □□□□□□□ □□ □□□□□□□
□□□□□ □□□□□ □□□□□ □□□ □□□□□□ □□□□:

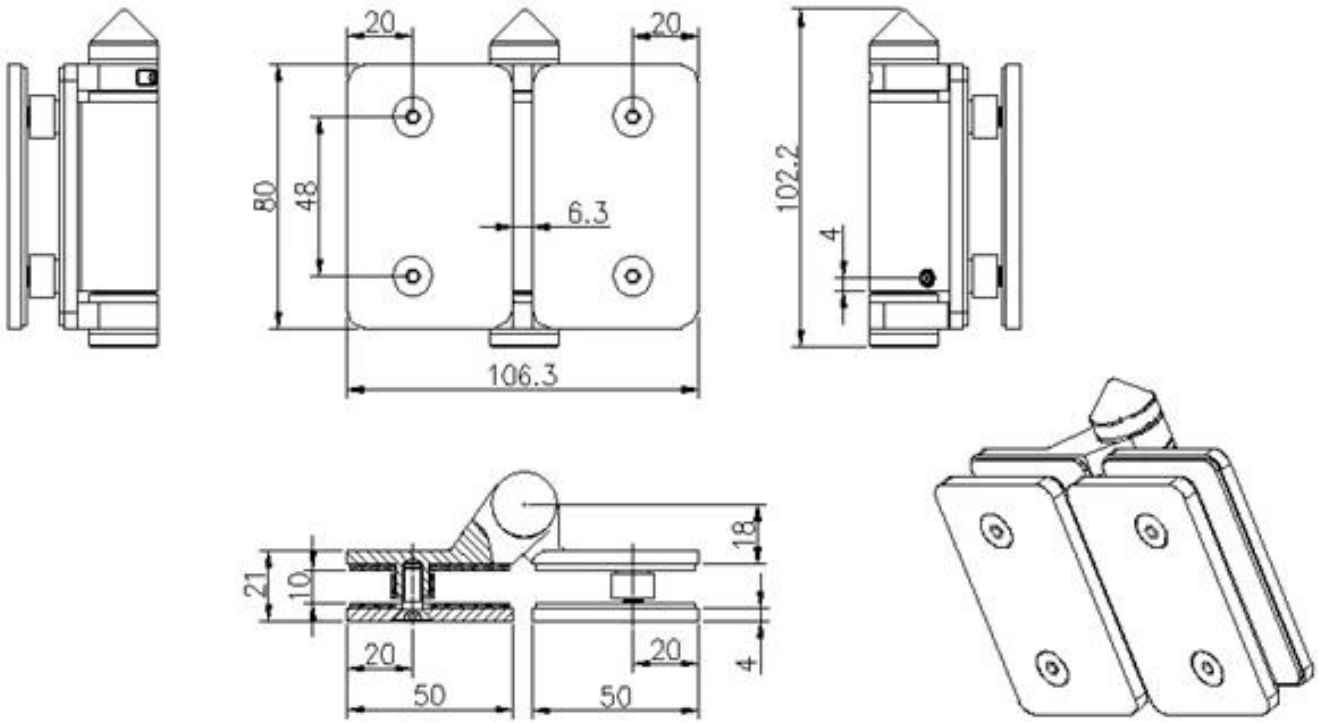

G-G2 :□□□□□ □□□□□ □□□□□□□
□□□□□□ □□□□□□ □□□□□ □ □□ □□□□□ □□□□□□ □□□□□10/12 /8 □□□□□ □ □□ 18 □□□□□□ □□□□□ □□□ □□□□□□
□□ 10/12
1 □□ 42 □□□□□□ □□□□□□ 2 □□ □□□□ □□□□ □ □□□□□□ □□
.□□ 42 □□ □□□□□ □□□□□ □ □□□□□□ □□□□ □□ □□20 - □□□□ □□□□□ □□□□ □□□□ □□□
□□□□ □□□□ □□□□□ □□10/12 /8 □□□□□ □ □□ 18 □□□□□□ □□□□□ □□□ □□□□□□
□□□□□ □□□□□ □□□ □□□□□□□ □□□□□□:

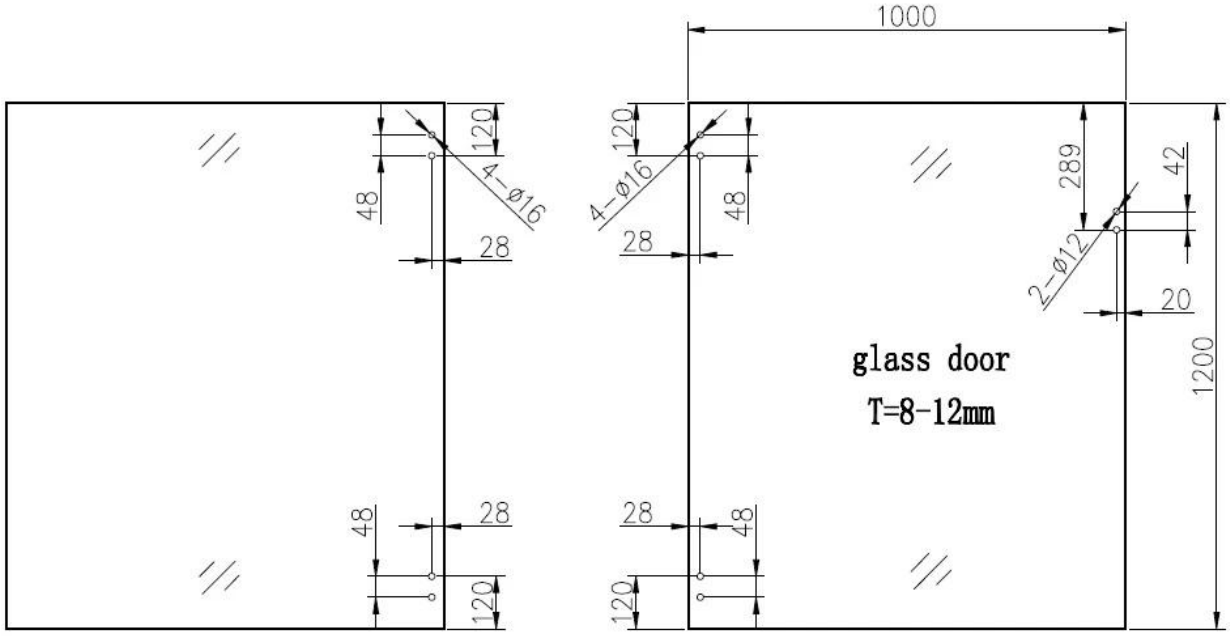

KEBIL科比奥™
www.launch-china.cn

Glass gate hinge series

1、Glass-Glass hinge,Glass to Wall hinge and Glass to Round post hinge are suitable for 1000x1200mm glass gate 8-12mm thick .
When you open the glass gate it will close automatically .
2、Our glass hinges are made by precision casting with stainless steel 316 material , satin and mirror finish optional .
3、Our hinges must be applied on tempered glass .

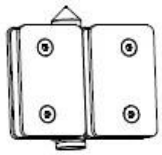

Glass to Glass

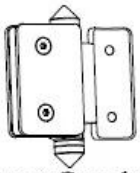

Glass to Round post

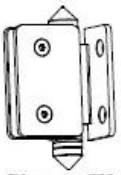

Glass to Wall

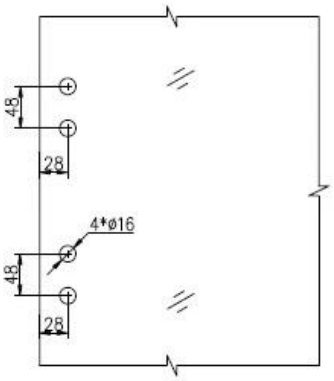

Hole dimensions

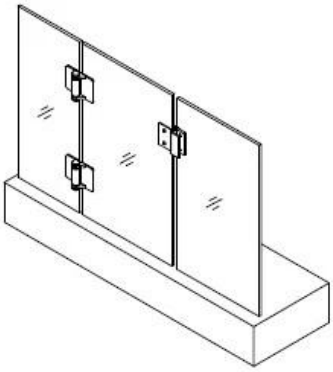

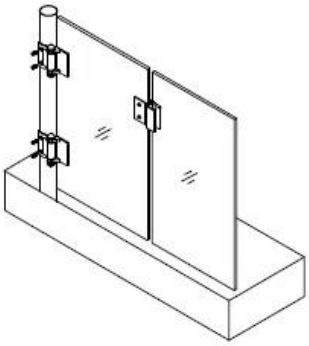

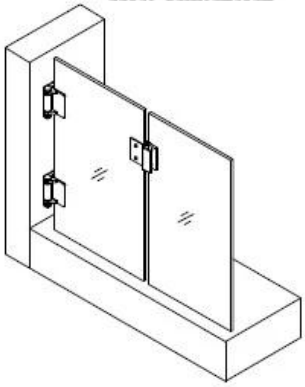

□□□□□ □□□□□□□ □□□□ □□□ □□□□□□□ □□□□ □□□□□□□□ & □□□□ □□□□□□ □□□□ □□□□□ □□□ □□ □□□: https://www.youtube.com/watch□v=DKZlF0cAt1M

□□□□□□□□ □□□□□□□ □□□ □□□□□ □□□□ □□□□□□□□□ □□□□□□□ □□□□ □□□□□□□□ □□□□□□ □□□□□ □□□ □□ □□□:

www.wapoolfencing.com.au
www.wapoolfencing.com.au
www.wapoolfencing.com.au
www.wapoolfencing.com.au

[illegible]:

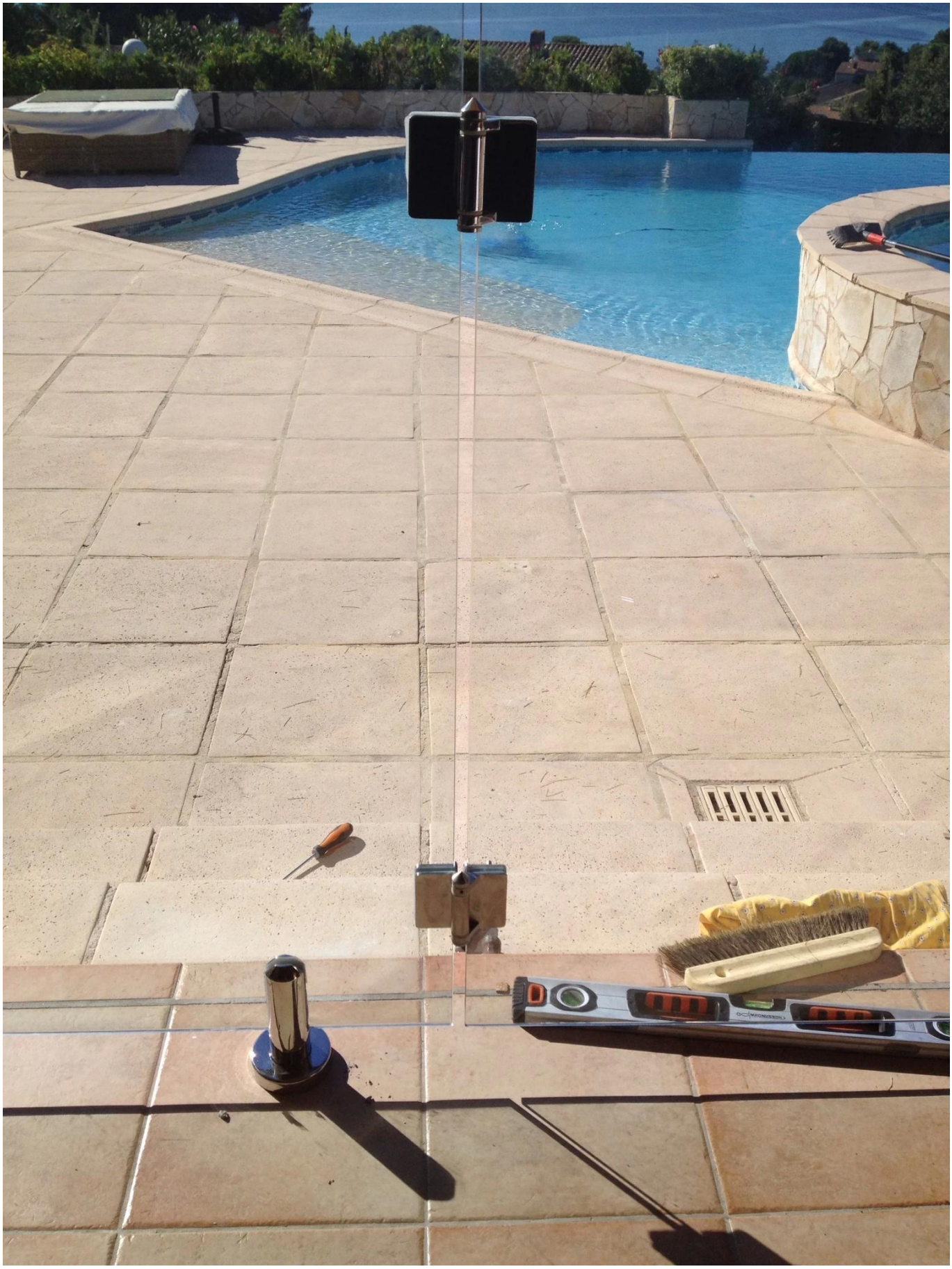

[illegible]:

□□ □□□□□□□ □□ □□ □□□□□□ Wendy (sales04@launch-china.cn) □□□□□□□□□ □□ □□□□□.