□□ □□□ □□□□□□ □□□□□□□□ □□□ □□□□□ □□□□□□□ □□□□□□□ □□□ □□□□□ □□□□□ □□□□□□ □□□□ □□□□□
10 □□□MM 19 □□□MM □□□□ □□□□ □□□ □□□□□ □ □□□□ □□□□□ .

□□□ □□ □□□□□□□□□□ □□□□□□ □□□ □□□ SGS.

1). □□□□□□ □□□□□□□□ □□□ □□□□□ □□□□□□□ □□□□□□□ □□□□□ -

1. □□□□□ SF-50
2. 304/316 □□□□□ □□□□□□□ □□□□□□□ □□□□
3. □□□ □□ □□□□□ :□□□□□□□
4. □□ 30 □□□□ □ □□ 12 □□□□ □ □□ 50 □□□ □ M12 * 120 □□□□□□□□ / □□□□□□ □□□□
5. 19-10 □□□□□□mm
6. □□□□ □□ □□□□□□□ □□□□□ 6-4 □□□□□ □□□ □□□□□ □□□□□□ □□□□ □□
7. □□□□□□ □□□□□□□□ □□□ □□□□□□ □□□□□□□□ □□□□□□ □□□□□
8. □□□□ □□□□□□□ □□□□ 20 □□□

2). □□□□□□ □□□ SF-50 □□□□□□ □□□□□□□□ □□□ □□□□□ □□□□□□□ □□□□□□□

□□□□□□□ □□□□□ □□□ □□□□□ -

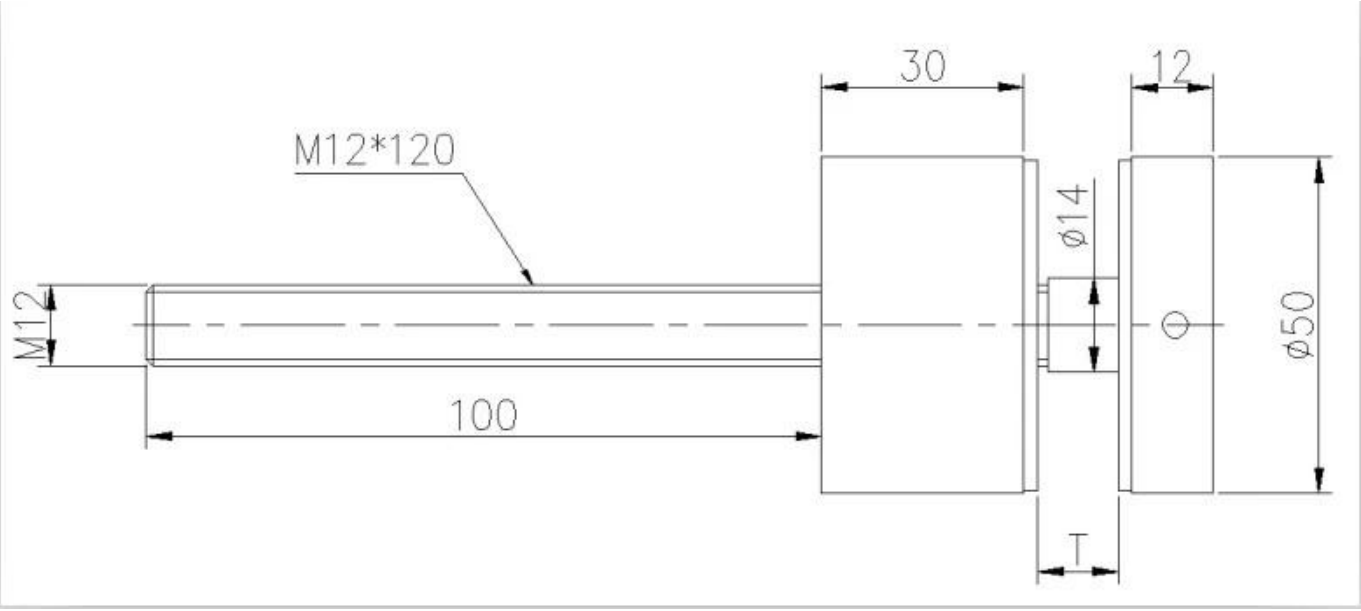
30
12
M12*120
ø14
M12
ø50
100
T

□□□ □□□ □□□□□ □□□ □□□□ □□□□ □□□□□ □□□□□□□ □□□□□□□-

KEBIL科比奥®

SF-50

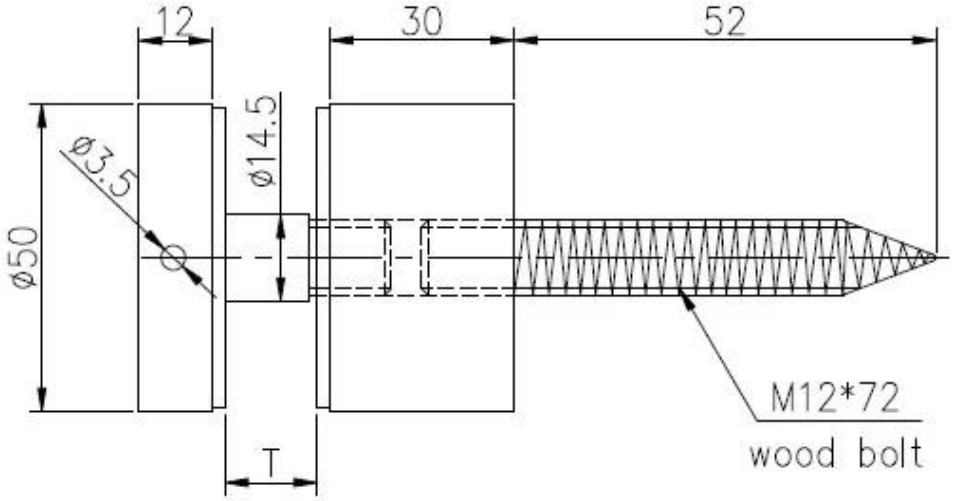

			深圳市朗驰商贸有限公司 SHENZHEN LAUNCH CO.,LTD.				Surface treatment		Propot
			Design	Jacky	Drawing NO:SF-50		Material		1:1
			Check				No note of entity size tolerance		
			Craft		Name:Standoff		Linear tolerance	X.	±0.1
Quantity	Total	Page	Audit			Revision		X.X	±0.1
			Approve			V001		X.XX	±0.1
							Angle tolerance	X.	±1°
								X.X	±0.5°

3). □□□□□ □□□□□□□□ □□□□□□□□ □□□□□□□□ □□□□□□ □□□□□ □□□□□□ □□□□□ -

5). □□□□□ □□□□□□□ □□□□□□ □□□□□□□□ □□□ □□□□□ □□ □□□□□□□ □□□ -

- [illegible] [illegible]. [illegible] [illegible] [illegible] [illegible]

Shenzhen Launch Co., Ltd was established in 2004, located at Nanshan District, Shenzhen, and one hour by car from Hongkong International Airport. Our main product is high-grade building materials includes stainless steel balustrade post, staircase handrail, balcony guardrail, swimming pool fence and other high-grade building materials. All the products are designed strictly according to the high-end market requirements. We have our own factory in Tangxia Town, Dongguan, has a variety of precision equipment more than 50 sets: CNC lathe, milling machine, punching machine, pipe cutter, argon welder, drilling machine, polisher, etc. which can provide customers with complete product processing services. With the German SPECTRO Spectrometer, we insist on testing every batch of materials to ensure that the material is highly qualified. We also have hardness gauge, secondary element and other test equipment to ensure the products meets customers' requirements.

ABOUT US

OUR ADVANTAGE

Please do not hesitate to contact us if you have any requirement regarding our production lines, you can expect a timely reply with professional solutions!

Own factory, shortest lead time.

Can help customers design product drawings based on customer ideas and design engineering installation drawing according to the customer site sketch.

Sample order, trial order acceptable.

Provide material test report to ensure that the material is qualified.

13 years of industry experience, we can help customers recommend the best solution to help customers save cost.

OUR FACTORY

More than 13 years experience in hardware industry design and processing, we can provide customized services from design to the sample and small batch trial production.

OUR CERTIFICATE

With premium quality, competitive price and superior service, we won a lot of customers' favor.
Our products are popular in North America, European and Australia.

PRODUCTION PROCESS

Casting

CNC lathe

CNC Milling

Stamping

Drilling & Tapping

Polishing

PACKAGING & DELIVERY

PAYMENT & TRANSPORTATION

Welcome Alibaba Trade Assurance Order!

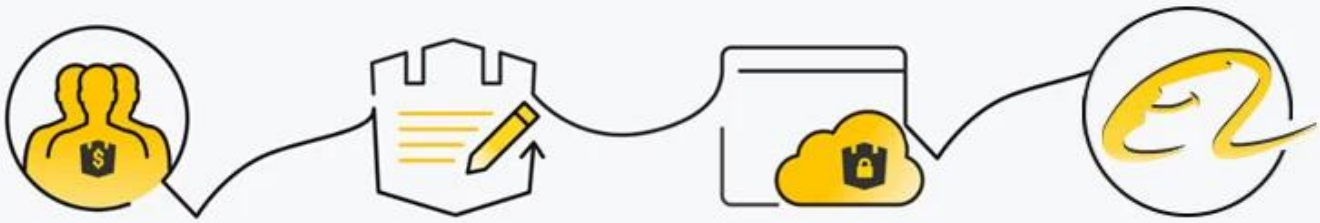

1. Start an order
2. Negotiate terms with our sales service & confirm order
3. Make payment
4. Alibaba provide full assurance

PayPal MasterCard VISA HSBC

FAQ

1. What materials do you have?

SS304, SS316, SS316L, Duplex 2205, etc.

2. Can you send me your whole price list?

Sorry, as the price related to many factors, such as quantity, material type, surface treatment and so on, we will offer you exact quote after we confirm your detailed requirements.

3. Do you offer OEM & ODM service?

Yes, we can make the products according to your technical drawings or samples, we are professional in investment casting, die casting, stamping, CNC machining, etc.

4. What kind of payment you accept?

T/T, L/C, PayPal, West Union, etc.

5. What is your payment term?

TT(30/70) or LC at sight.

6. What is your delivery time?

Within 5 workdays for hot-sale items, 15-25 workdays for batch orders.

7. Do you offer after-sales service?

Of course, any question after you purchase our products, we will get back to you within 24 hours.

CONTACT US

WELCOME TO CONTACT US. WE WILL DO OUR BEST TO HELP YOU!

CELIA CHEN

Email : sales01@launch-china.cn

Skype : launch-01

Mob. 86-13590273543