□□□□□ □□□□□□□ □□□□□□□ □□ □□□□ □□□□

304SS / 316SS

□□□□□□□ □□□ □□□□ / □□□□□□□

6-12 □□□□ □□□

□□□□□□□ □□□□□ □□ □□□□□ □□□□□

G102 / G102R

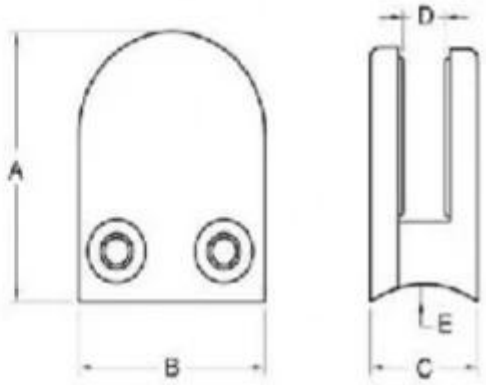

Model No.	A	B	C	D	E
G106	50	40	25	11	0
G106R	52	40	25	11	R-21.5

G103 / G103R

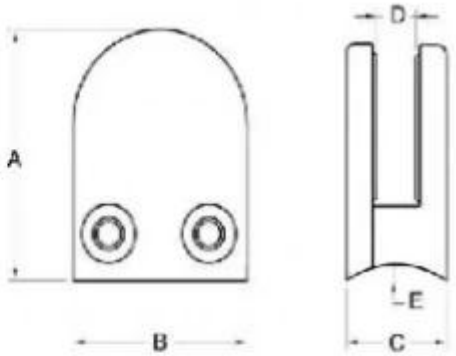

Model No.	A	B	C	D	E
G103	50	40	22	8	0
G103R	52	40	22	8	R-21.5

G104 / G104R

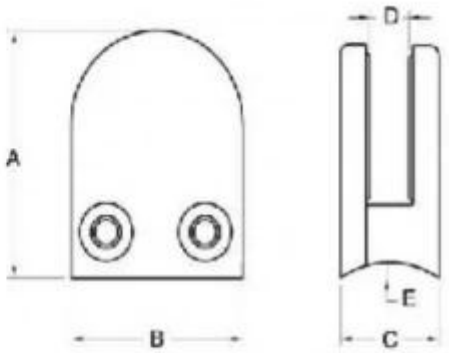

Model No.	A	B	C	D	E
G104	50	40	26	12	0
G104R	52	40	26	12	R-21.5

G105 / G105R

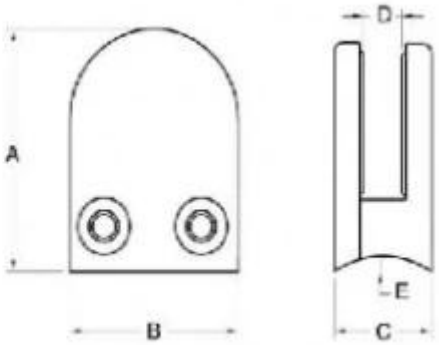

Model No.	A	B	C	D	E
G103	50	40	22	8	0
G104	50	40	26	12	0
G105	55	45	28	14	0
G103R	52	40	22	8	R-21.5
G104R	52	40	26	12	R-21.5
G105R	58	45	28	14	R-25.4