□□□□□ Shenzhen Launch □□□ □□□□ □□□□ 2004 □□□ □□ SGS □□□□□ □□□□□□□ □□□□□□ □□□ .□□□□□ 16 □□□□ □□□.

COMPANY INTRODUCTION

Verification Type: Supplier Assessment Onsite Check

Country / Region: Guangdong, China ✓

Year Established: 2004 ✓

Main Products: CNC Machining Parts,Stamping Pa... ✓

Main Markets: North America, Oceania, Mid East,... ✓

Total Annual Revenue: confidential ✓

Total Employees: 11 - 50 People ✓

Alibaba.com Gold Plus Supplier

Main Product Lines Verification Report

Presented to

Shenzhen Launch Co., Ltd.

深圳市朗驰商贸有限公司

Company Address	B5003, Building 3, Yilida Building, No. 1092 Nanshan Avenue, Dengliang Community, Nanshan Street, Nanshan District, Shenzhen City, Guangdong Province, China
Consigner of Assessment:	Alibaba
Gold Supplier Member ID:	launch168
Gold Supplier Company Name:	Shenzhen Launch Co., Ltd.
Contact Person:	Mr. Binfeng Gao
Phone Number:	0086-13802569770
Fax Number:	0086-755-86372611
Email:	gbf999@china.com
Website Address (URL):	http://launch-china.en.alibaba.com

Service Provided by SGS
Report No.: 19536352_P+T

Alibaba.com Global trade starts here. SGS

Alibaba.com Gold Plus Supplier

Verified

Assessment Report

Presented to

Cooperation Company of Shenzhen Launch Co., Ltd.

深圳市朗驰商贸有限公司合作工厂

Gold Supplier & Assessed Company Relationship:	☐ Self-owned ☐ Wholly Owned ☐ Shareholder/Partner ☐ Kindred between Owners ☒ Cooperation Partner
Company Address	Confidential
City / Country:	Huizhou / China
Consigner of Assessment:	Alibaba & Shenzhen Launch Co., Ltd.
Gold Supplier Member ID:	launch168
Gold Supplier Company Name:	Shenzhen Launch Co., Ltd.
Contact Person:	Confidential
Phone Number:	Confidential
Fax Number:	Confidential
Email:	Confidential
Website Address (URL):	http://launch-china.en.alibaba.com

Service Provided by SGS
Report No.: 19552720_P

Alibaba.com Global trade starts here. SGS

WHY CHOOSE US

15 YEARS EXPERIENCE

We have been manufacturing railing hardwares since 2004.

ONE STOP SERVICE

We provide integrated railing solutions.
We manufacture.
We deliver.

PROFESSIONAL R&D TEAM

We have engineering experts for developing new products.

TOP QUALITY & GOOD PRICE

We are strict on quality control as well as cost evaluation.

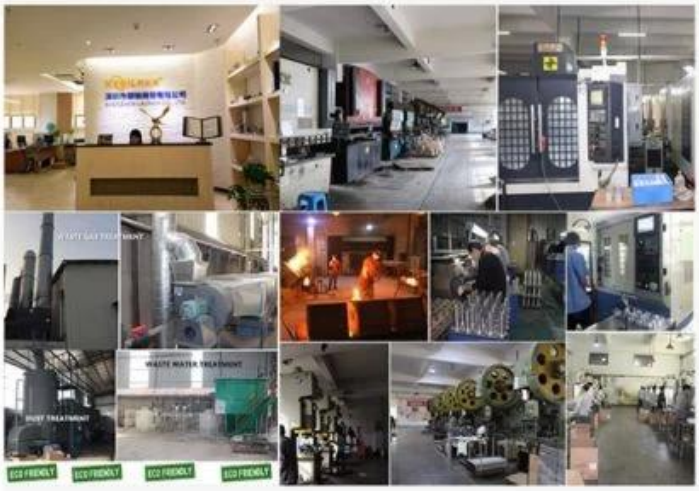

ABOUT US

Shenzhen Launch Co., Ltd was established in 2004, located at Nanshan District, Shenzhen, and one hour by car from Hongkong International Airport. Our main products are high-grade building materials including stainless steel balustrade post, staircase handrail, balcony guardrail, swimming pool fence and other high-grade building materials. All the products are designed strictly according to the high-end market requirements. We have our own factory in Tangxia Town, Dongguan,with more than 50 sets of various precision equipments , such as CNC lathe, milling machine, punching machine, pipe cutter, argon welder, drilling machine, polisher, etc. which can provide customers with complete product processing services.

□□□□□□ □□□□□□□

□□□□□□ □□□	□□□□□ □□□□□□□ □□□□□□□ □□□□□□□□ □□□□□□□□
□□□□	304SS / 316SS
□□□□□□ □□□	□□□□ / □□□□□□ / □□□□□□□
□□□□□ □□□□	Dia.50 * 30mm / 50 * 50mm
□□□□□□ □□□	Dia.50 * 12 □□
□□□□□□ □□□□	M12 * 72 / M12 * 100 □□

□□□□□□ □□□

KEBIL科比奥®

□□□□□□□

Glass standoff connect with wood

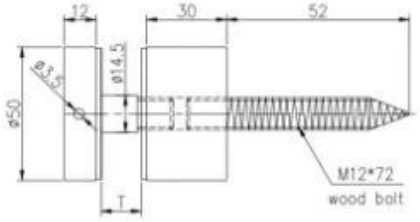

Glass standoff connect with concrete

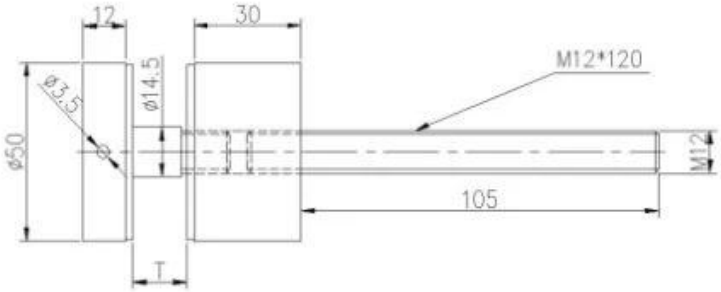

STAND OFF

Part No.	Material	Finish	Body	Bolt size
▪ SF-30 ▪ SF-40 ▪ SF-50 ▪ SF-50A	▪ AISI 304 ▪ AISI 316	▪ Satin ▪ Mirror	▪ 30x10; 30x25mm ▪ 40x10; 40x30mm ▪ 50x12; 50x30mm ▪ 50x12; 50x50mm ▪ silicon rubber gasket included	▪ M10x120 bolt ▪ M10x72 wood screw ▪ M8x100 bolt ▪ M8 x72 wood screw

Part No.	Material	Finish	Body	Bolt size
▪ SF-38Z	▪ AISI 304 ▪ AISI 316	▪ Satin ▪ Mirror	▪ hollow type ▪ 38x7.5;38x38mm ▪ silicon rubber gasket included	▪ M8x70 hexagonal screw

Part No.	Material	Finish	Body	Mounting plate size
▪ SF-50T	▪ AISI 304 ▪ AISI 316	▪ Satin ▪ Mirror	▪ 50x10;50x30mm ▪ silicon rubber gasket included	▪ 200x100x10mm

SF-50T

SF-50A

SF-50

SF-38

SF-38Z

SF-30

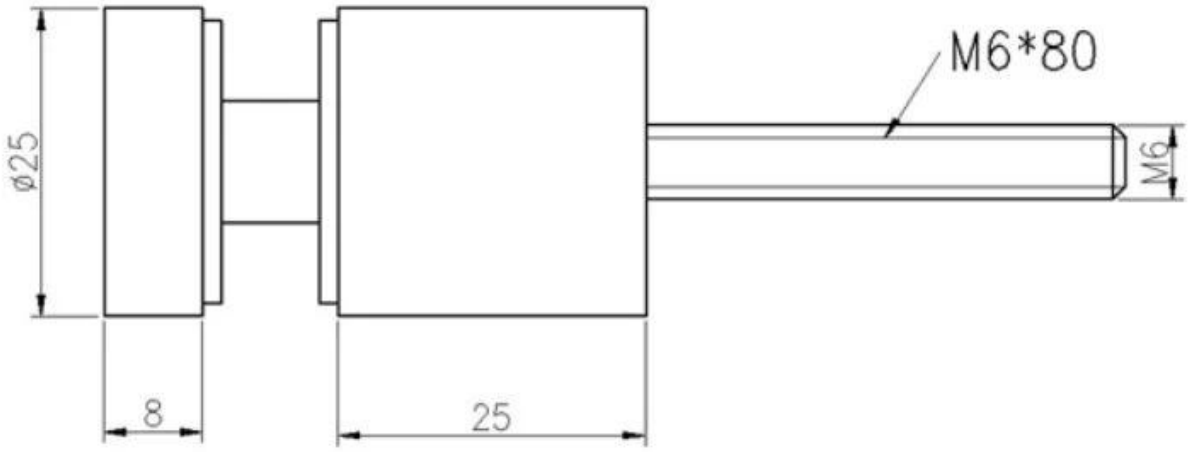
M6*80
ø25
M6
8
25

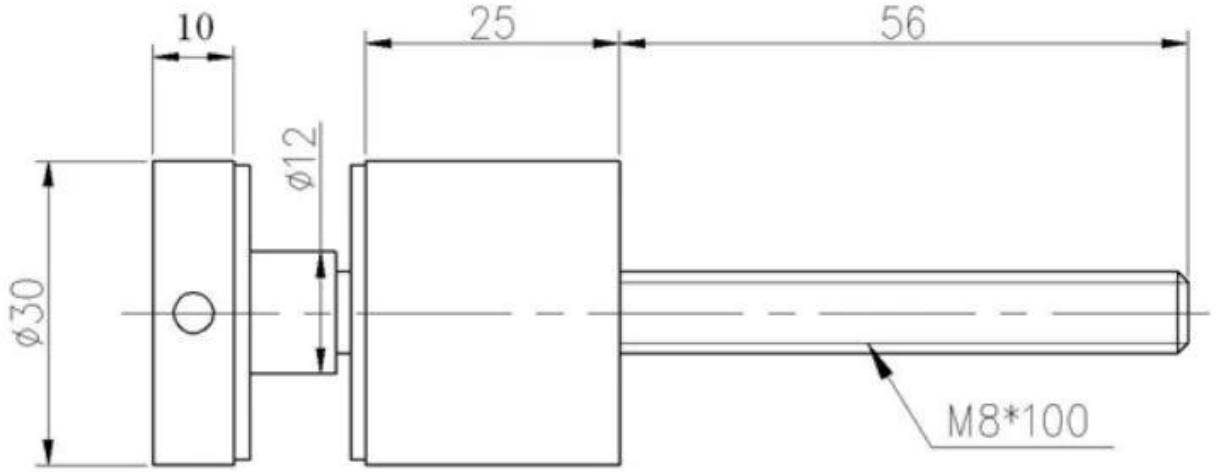
10
25
56
ø12
ø30
M8*100

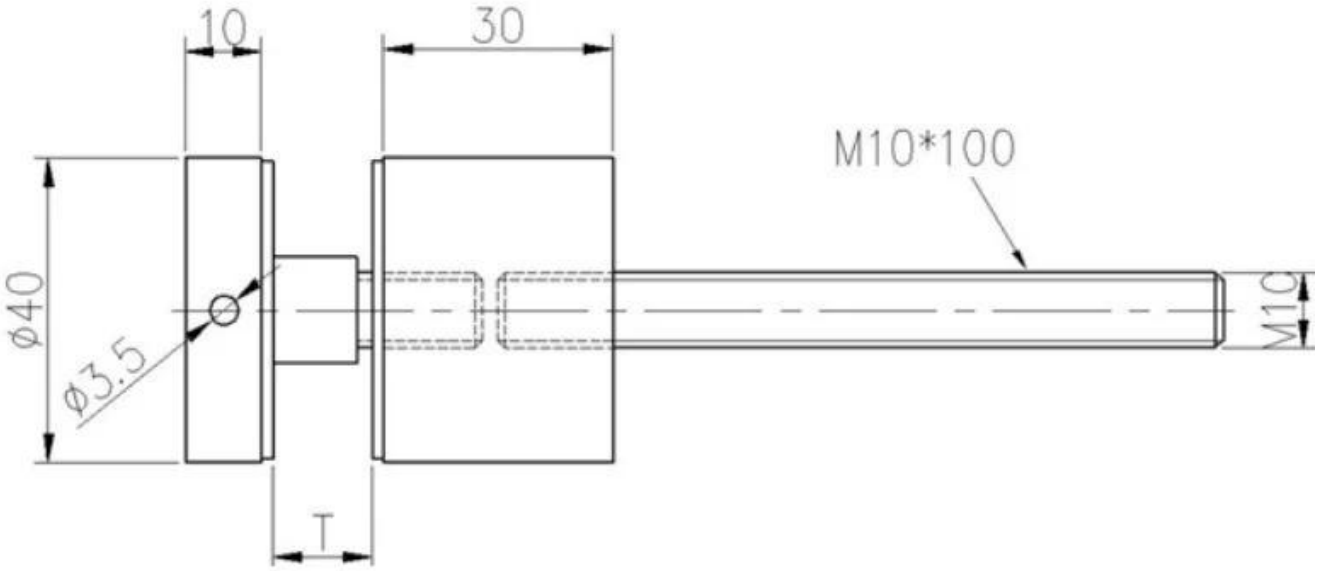
10
30
M10*100
ø40
ø3.5
T

□□□□□□□□□

□□□□□□□□ □□□

Standoff Glass Blaustrade

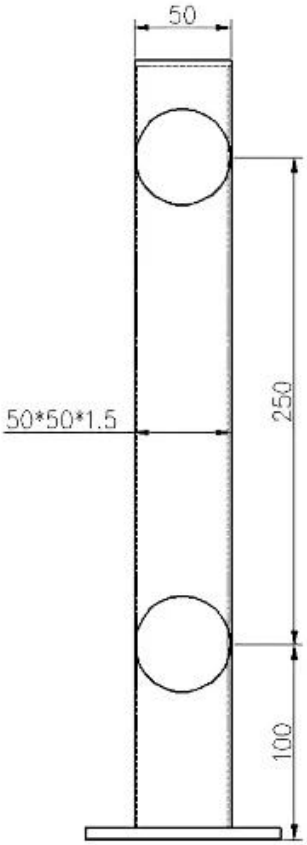
50
50*50*1.5
250
100

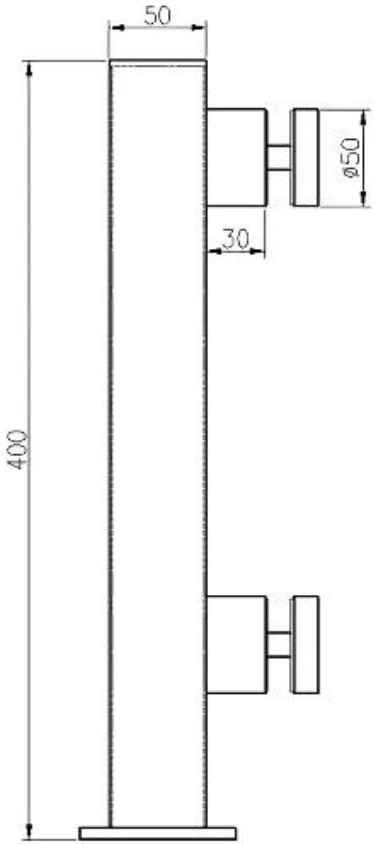
50
ø50
30
400

□□□□□□□ □□□

□□□ □□□□□□□ □□ □□□□□ □□□ □ □□□□□□□□ □□ □□□□ □□□ □□□.

□□□□ □□□□□

□□□□□□□□□□ □□□□□□: **sales02@launch-china.cn**

□□□□□□ **/ WhatsApp / Wechat: +8615906261741**