Glass Standoff □□□ □□□□ □□□□□ □□□□□□□□ □□□□□ □□ □□□□□ □□□□□□ □□□□□ □□□□□□ □□□□□ □□□□□ □□ □□□□□ □□□□□□ □□□□□ □□□□ □□□□□□ □□□□□□□ □□□□□□□ □□□□□□□ □□□□□□□ □□□□□ □□□□□ .□□□□□□ □□□□ □□ □□□□□□ □□□□□ □□□□□□□ □□□ .□□□ □□□ □□□ □□□□□□□ □□□□□ □□□□□□□ □□□□□□ □□□ □□□□□□□□□ □□ □□□□□□ □□ □□□□□ □□□□□□□□□ □□□□□□□ □□□□□□□ □□ □□□□□□ □□□□□.

## □□□□□□ □□□

□□□□□□□□□□ □□□□ □□ □□□ _ □□□□ □□□

□□□□□ □□ □□□□□□□□□

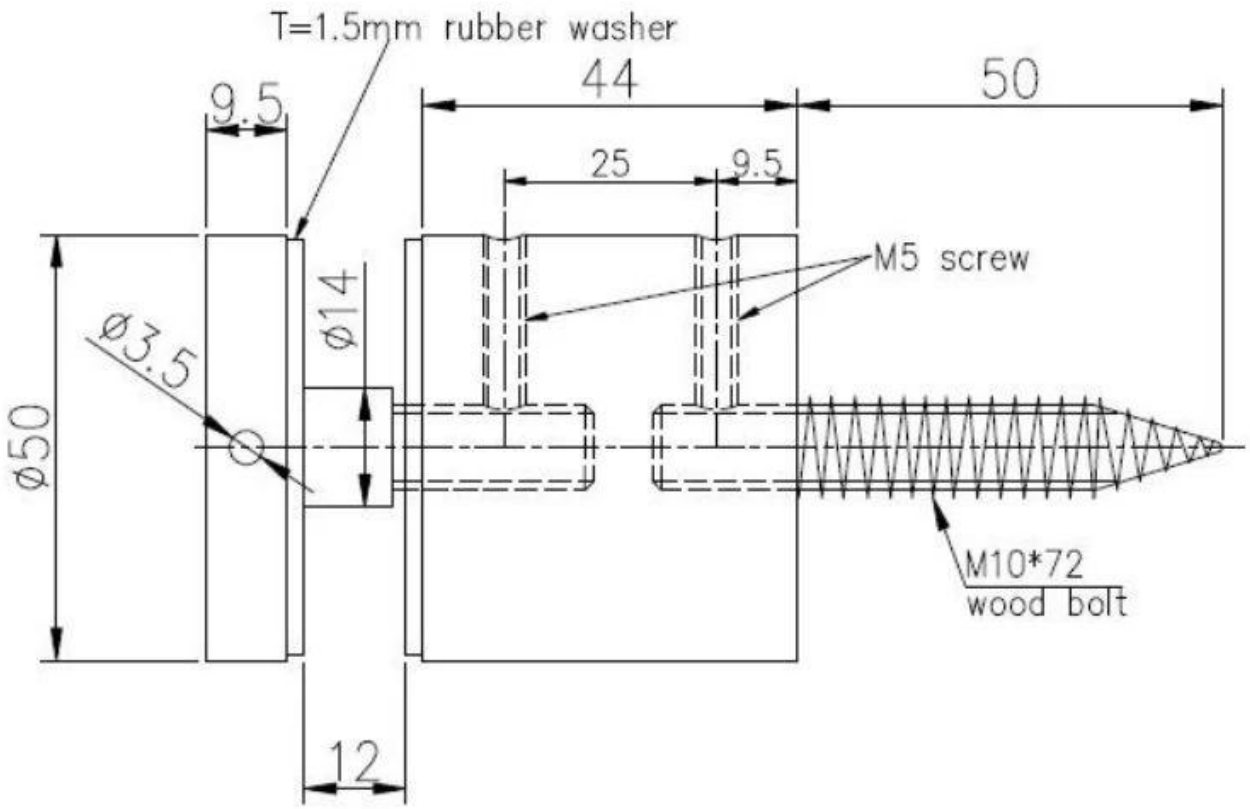
T=1.5mm rubber washer
9.5
44
50
25
9.5
M5 screw
ø14
ø3.5
ø50
M10*72
wood bolt
12

□□□□□□□□□□ □□□□□ □□□□□□□□□

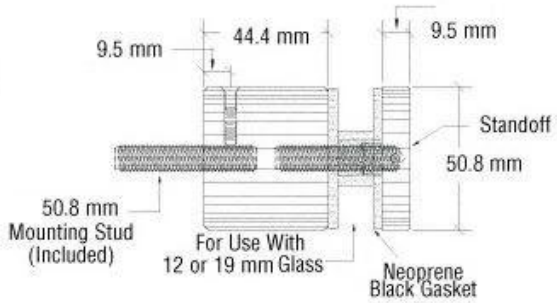
9.5 mm
44.4 mm
9.5 mm
Standoff
50.8 mm
50.8 mm
Mounting Stud
(Included)
For Use With
12 or 19 mm Glass
Neoprene
Black Gasket

□□□□□□ □□□□□□□□□ □□□□□□□:

# STAND OFF

| Part No. | Material | Finish | Body | Bolt size |
|---|---|---|---|---|
| ▪ SF-30<br>▪ SF-40<br>▪ SF-50<br>▪ SF-50A | ▪ AISI 304<br>▪ AISI 316 | ▪ Satin<br>▪ Mirror | ▪ 30x10; 30x25mm<br>▪ 40x10; 40x30mm<br>▪ 50x12; 50x30mm<br>▪ 50x12; 50x50mm<br>▪ silicon rubber gasket included | ▪ M10x120 bolt<br>▪ M10x72 wood screw<br>▪ M8x100 bolt<br>▪ M8 x72 wood screw |

| Part No. | Material | Finish | Body | Bolt size |
|---|---|---|---|---|
| ▪ SF-38Z | ▪ AISI 304<br>▪ AISI 316 | ▪ Satin<br>▪ Mirror | ▪ hollow type<br>▪ 38x7.5;38x38mm<br>▪ silicon rubber gasket included | ▪ M8x70 hexagonal screw |

| Part No. | Material | Finish | Body | Mounting plate size |
|---|---|---|---|---|
| ▪ SF-50T | ▪ AISI 304<br>▪ AISI 316 | ▪ Satin<br>▪ Mirror | ▪ 50x10;50x30mm<br>▪ silicon rubber gasket included | ▪ 200x100x10mm |

□□□□□□ □□□ □□□□□□□□ □□□□□□□ □□□□□ □□□□□ □□□ □ □□□□□ □□□□□□□□ □□□□□□□□ □□□□□ □□□ □□□ □□□□.

**□□□ □□□□□: SF-30**

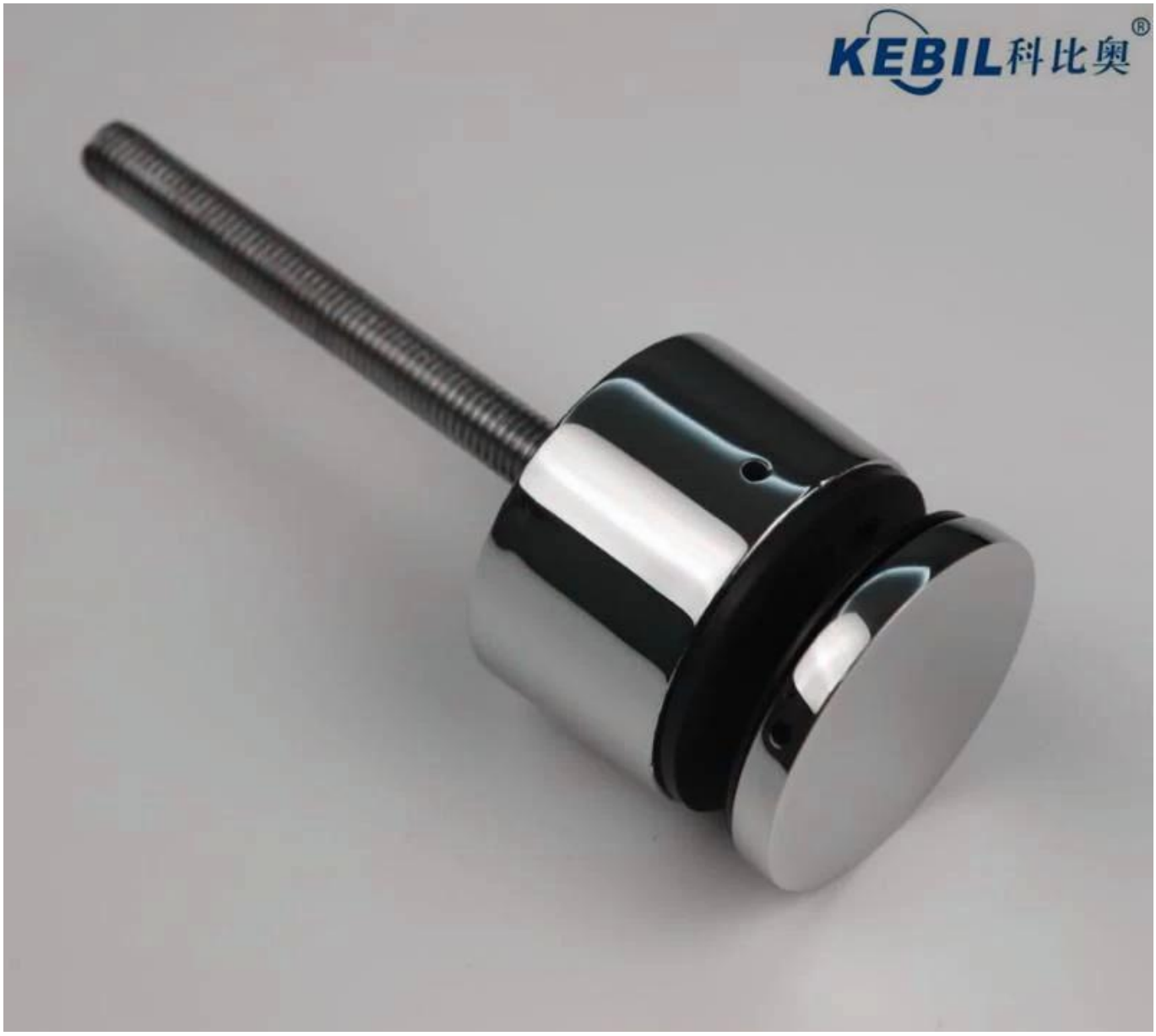


**□□□□□□□ □□□: SF-38Z**

**□□□ □□□□□: SF-50T**

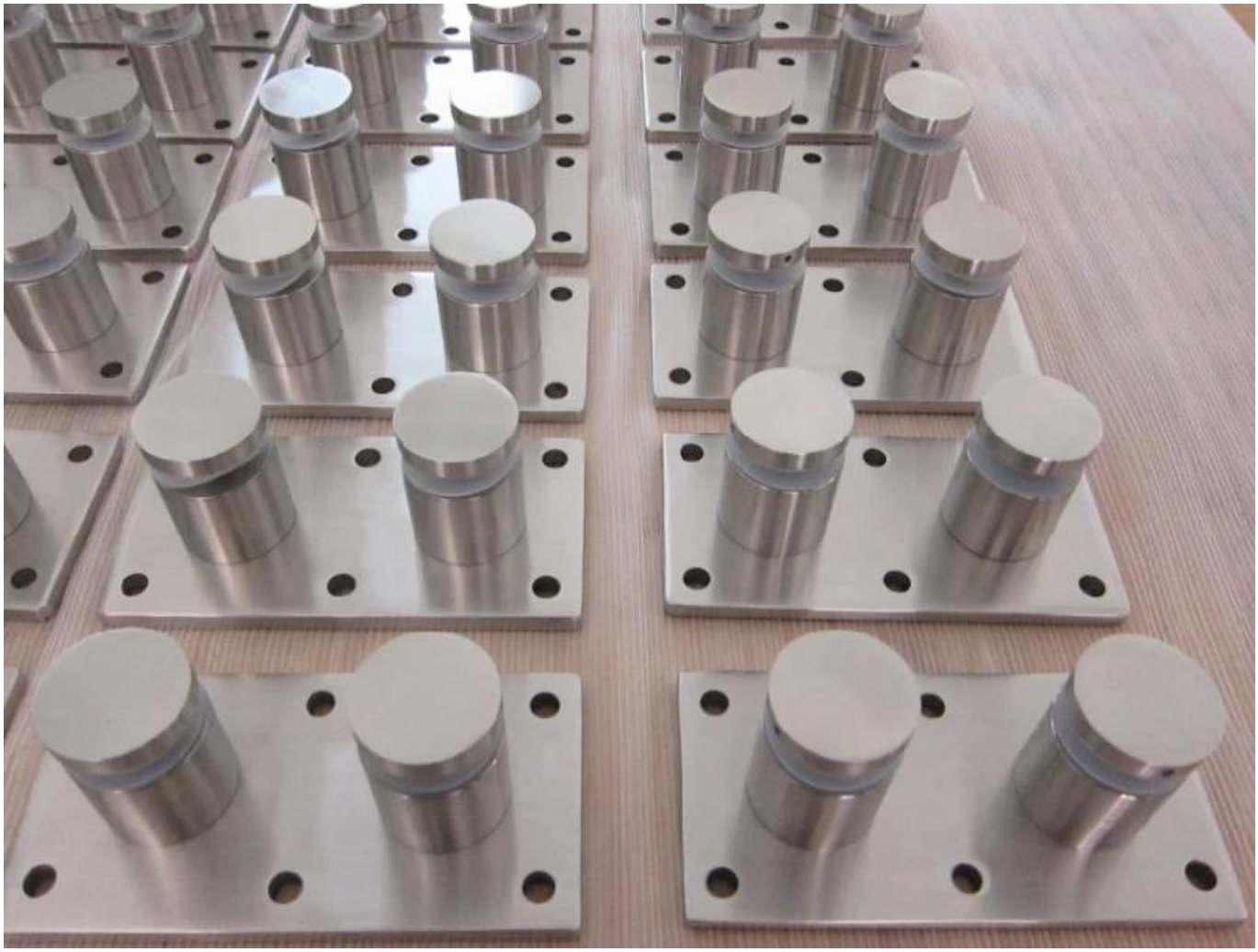

□□□□□□□□ □□□

□□□□□□□□ □□□

□□□ □□□□□□□ □□ □□□□□ □□□ □ □□□□□□□□ □□ □□□□ □□□ □□□.

□□□□ □□□□□

□□□□□□□□□□ □□□□□□: **sales02@launch-china.cn**

□□□□□□ **/ WhatsApp / Wechat: +8615906261741**