□□ □□□□ □□□□ □2004 □□□ □□□ □□□□□ □□□□□ □□□□□ SGS □□□□□□ □□□□□□□ □□□ .□□□□ 16 □□□□ □□□□ □□□□□□□□□.

COMPANY INTRODUCTION

Verification Type: Supplier Assessment Onsite Check

Country / Region: Guangdong, China ✓

Year Established: 2004 ✓

Main Products: CNC Machining Parts,Stamping Pa... ✓

Main Markets: North America, Oceania, Mid East,... ✓

Total Annual Revenue: confidential ✓

Total Employees: 11 - 50 People ✓

Alibaba.com Gold Plus Supplier

Main Product Lines Verification Report

Presented to

Shenzhen Launch Co., Ltd.

深圳市朗驰商贸有限公司

Company Address	B5003, Building 3, Yilida Building, No. 1092 Nanshan Avenue, Dengliang Community, Nanshan Street, Nanshan District, Shenzhen City, Guangdong Province, China
Consigner of Assessment:	Alibaba
Gold Supplier Member ID:	launch168
Gold Supplier Company Name:	Shenzhen Launch Co., Ltd.
Contact Person:	Mr. Binfeng Gao
Phone Number:	0086-13802569770
Fax Number:	0086-755-86372611
Email:	gbf999@china.com
Website Address (URL):	http://launch-china.en.alibaba.com

Service Provided by SGS
Report No.: 19536352_P+T

Alibaba.com Global trade starts here. SGS

Alibaba.com Gold Plus Supplier

Verified

Assessment Report

Presented to

Cooperation Company of Shenzhen Launch Co., Ltd.

深圳市朗驰商贸有限公司合作工厂

Gold Supplier & Assessed Company Relationship:	☐ Self-owned ☐ Wholly Owned ☐ Shareholder/Partner ☐ Kindred between Owners ☒ Cooperation Partner
Company Address	Confidential
City / Country:	Huizhou / China
Consigner of Assessment:	Alibaba & Shenzhen Launch Co., Ltd.
Gold Supplier Member ID:	launch168
Gold Supplier Company Name:	Shenzhen Launch Co., Ltd.
Contact Person:	Confidential
Phone Number:	Confidential
Fax Number:	Confidential
Email:	Confidential
Website Address (URL):	http://launch-china.en.alibaba.com

Service Provided by SGS
Report No.: 19552720_P

Alibaba.com Global trade starts here. SGS

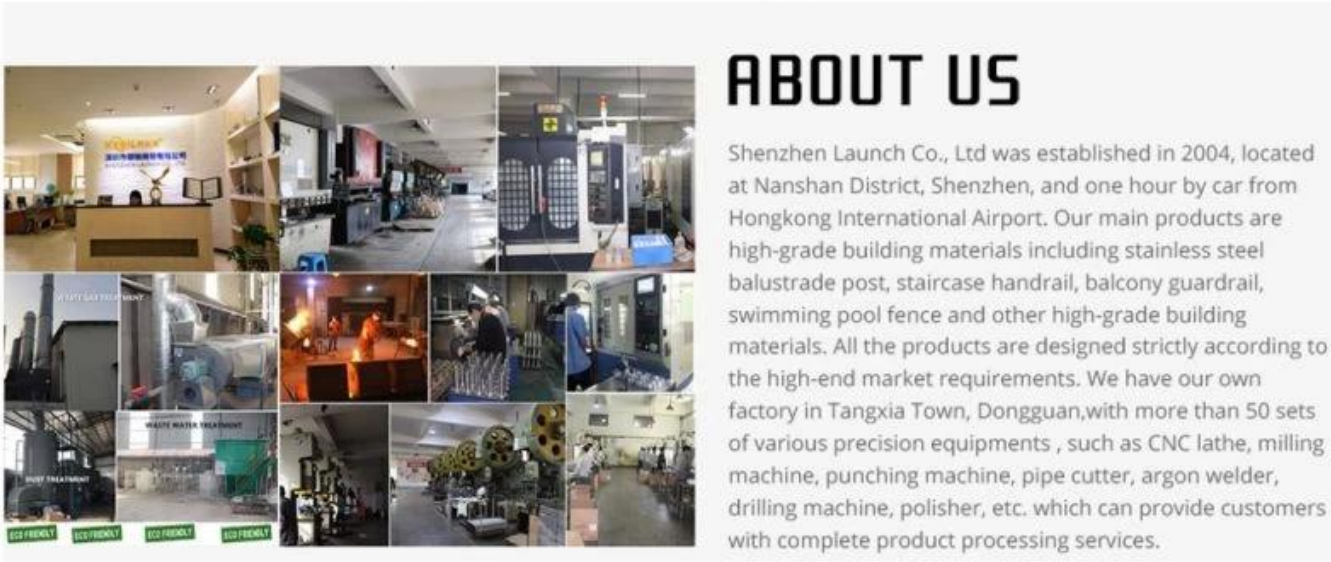

□□□□□□□□

□□□□□□ □□□	□□□□ 1.5 □□□□□ □□ □□□□ 2 □□□□ □□□□□□□□ □□□□
□□□□□□□ □□□.	T808.
□□□□	SS304 / SS316.
□□□□□□ □□□	□□□□ / □□□□ / □□□□□□□
□□□□□□□□ □□□	4MM□ 5MM□ 6MM
□□□	□□□□□□□□ □□□□□□□ □□□□□□ □□□□□ □□□□

□□□□□ □□□ □□□□□□□

□□□□□ □□□□□ □□□□

□□□□□□ □□□□□ □□□□□□□□□ □□□□□□□□ **M5 * 4** □ **M5 * 3** □□□□□□□ □□□ □□□ □□□□□

□□□□□□ □□□□□ □□□□ □□□□□□□ □□□□□

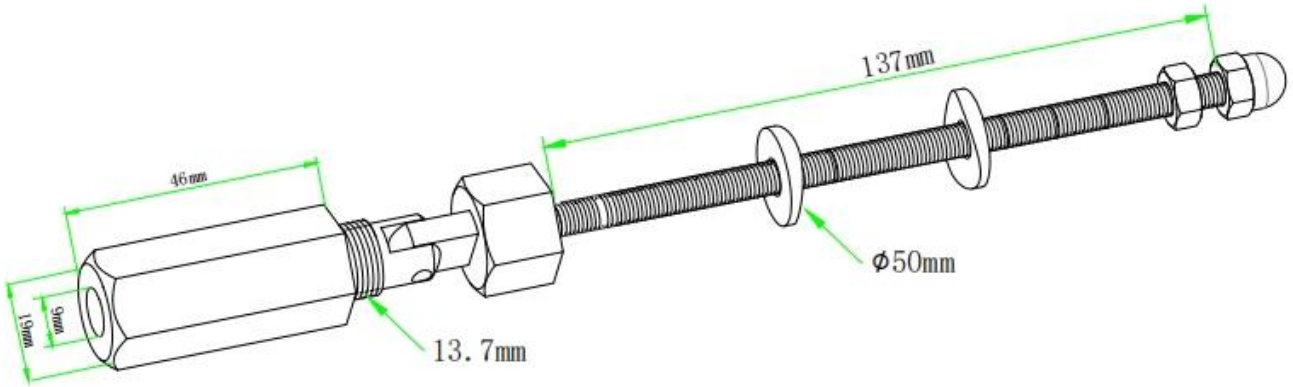
137mm
46mm
19mm
9mm
13.7mm
ϕ50mm

□□□□□□□□ □□□□□□□ □□□□□□□ □□□□□

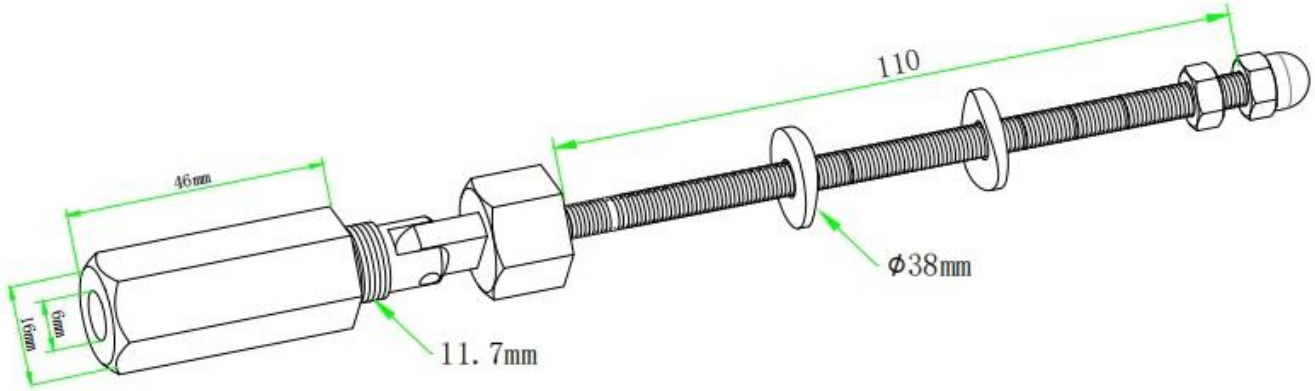
110
46mm
16mm
6mm
11.7mm
ϕ38mm

□□□□□□ □□ □□□□□□□□□□ □□□□□□

□□□□□□□□□ □□□□□□□□□□□□

KEBILA 比奥
SHENZHEN LAUNCH CO., LTD
LAUNCH INTERNATIONAL LIMITED
http://www.chinabalustrade.com

2pcs

□□□□□□□□□□□□□□□□□□□□□□□□□□□□□□□□□□

T801
3mm/4mm cable
T802
5mm/6mm cable
T803
4mm/5mm cable
T804
5mm/6mm cable
T807A
3mm cable

□□□□ □□□□ □□□□□ □□□□□ T803

T803 cable fitting , installation instructions

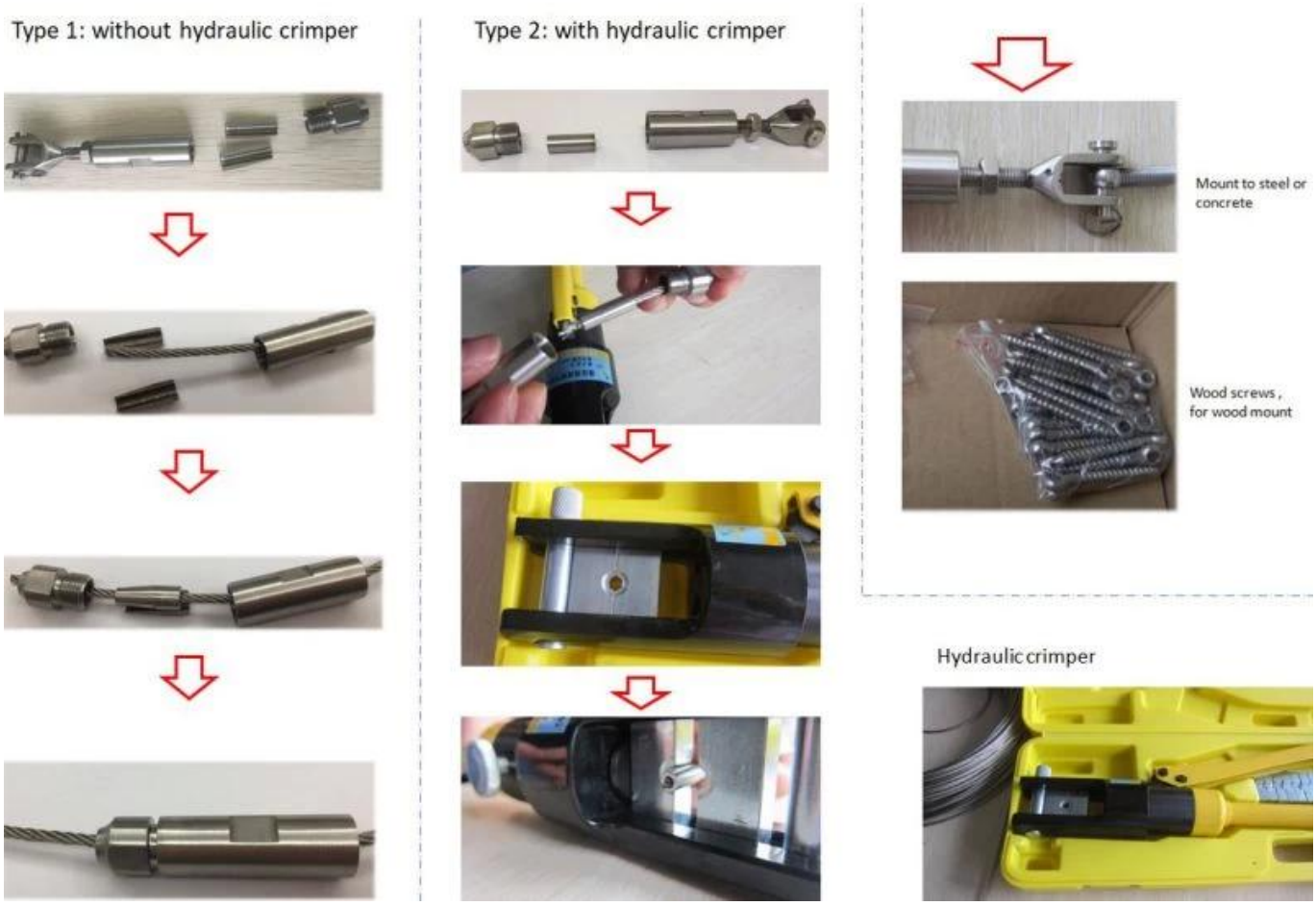

□□□□□□ □□□□□ □□□□□ □□□□ □□□□□□

□□□□:
3MM□ 4 □□□□□ □□□□□□□ □□ □□□□□□ □□ **6** □□□□ **5** □□□

□□□□□□□□□ □□□□□ □□□□□

Square post, vertical mount
40*40mm, 50*50mm recommended

Round post, vertical mount
Dia.: 42.4mm, 50.8mm recommended

Round post, side mount
Dia.: 42.4mm, 50.8mm recommended

□□□□□□□□□□□□

KEBIL科比奥®

KEBIL科比奥®

□□ □□□□□□□ □□ □□□□□ □□ □□□□ □□□□□□□ □□□ □□□□ □□□□ □□ □□□ □□□□ □□□□□.

□□□□□□□□□□ □□□□□□: **sales02@launch-china.cn.**

□□□□□□ **/ Whatsapp / Wechat: +86 159 0626 1741**