316 [illegible] [illegible] [illegible] [illegible] [illegible] [illegible] [illegible] [illegible] [illegible] [illegible] [illegible] [illegible] [illegible] [illegible].

[illegible] [illegible] [illegible] [illegible] [illegible] [illegible]-

[illegible]	[illegible] [illegible] [illegible] [illegible]
[illegible]	[illegible] [illegible] [illegible] [illegible]
[illegible] [illegible].	[illegible] [illegible]
[illegible]	316 [illegible] [illegible] [illegible]
[illegible]	[illegible] [illegible] [illegible] [illegible] [illegible] [illegible] [illegible] [illegible] [illegible]
[illegible] [illegible]	8 [illegible] 12 [illegible] 10 [illegible]
[illegible] [illegible] [illegible] .[illegible]	30 [illegible]
[illegible] [illegible]	[illegible] [illegible] [illegible] [illegible] [illegible]
[illegible]	1 [illegible]
[illegible] [illegible] [illegible] [illegible] [illegible]	[illegible] [illegible] [illegible] [illegible]

[illegible] [illegible] [illegible] [illegible] [illegible] [illegible] [illegible] [illegible] [illegible] [illegible] [illegible]-

SHENZHEN LAUNCH CO., LTD

SHENZHEN LAUNCH CO., LTD

SHENZHEN LAUNCH CO., LTD

SHENZHEN LAUNCH CO., LTD

□□□□□□□□ □□□□□□ □□□ □□□□□□ □□□□□ -

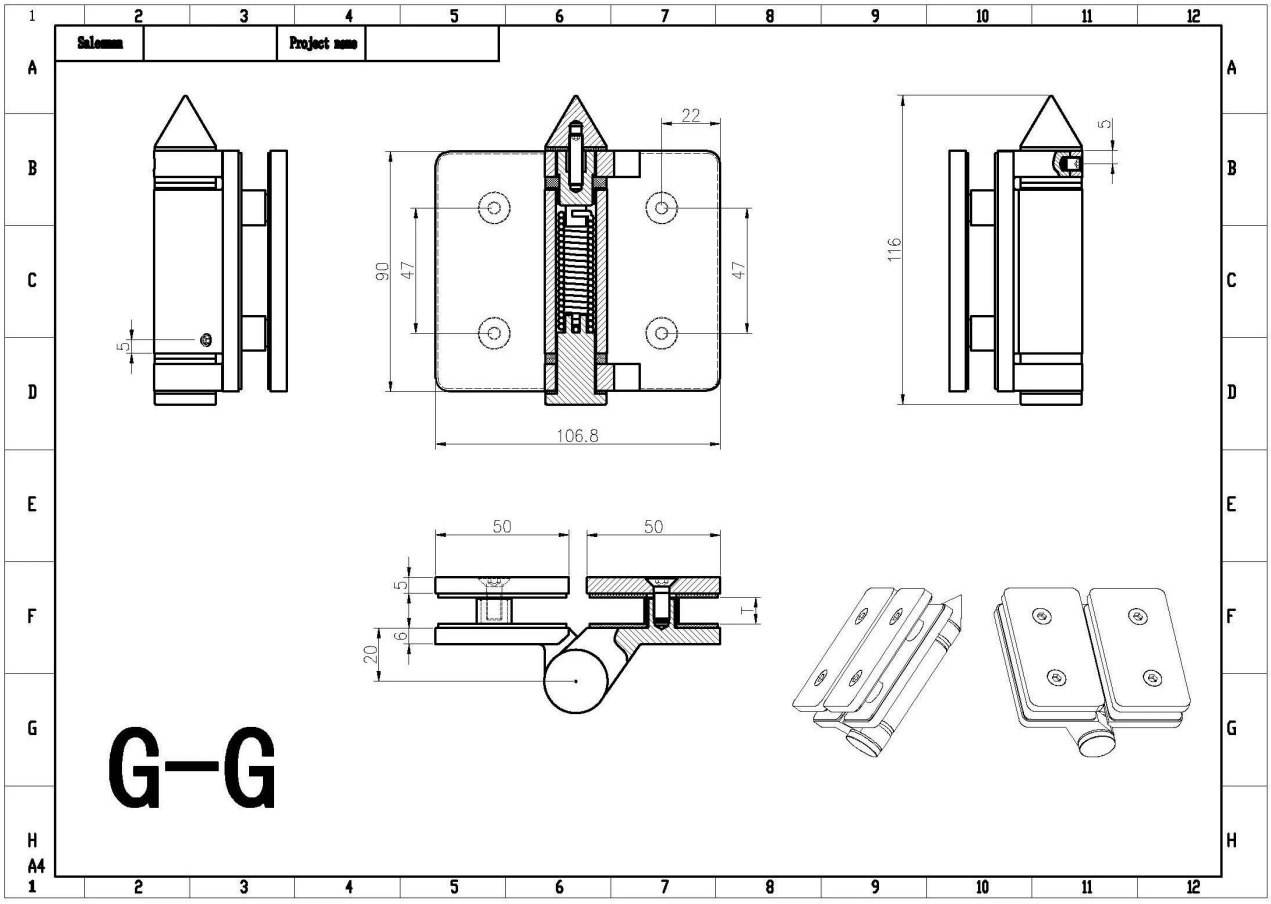

□□□□□□□□ □□□□□□□ □□□□ □□□□□□□ □□ □□□□□□□□ □□□□□□□□-

KEBIL科比奥
www.launch-china.cn

Instructions for adjusting tension on Glass to Round post hinge

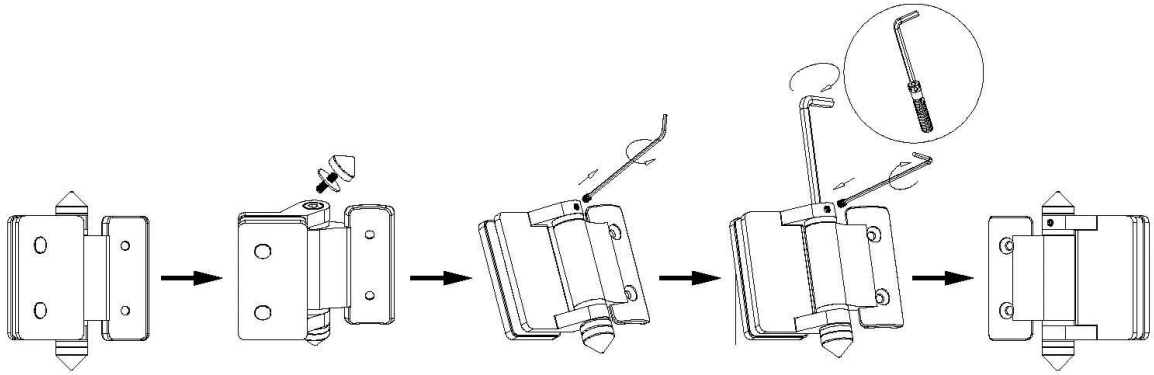

STEP 1
Remove cone and grub screw by turning anticlockwise to reveal tension pin.

STEP 2
Remove grub screw from side of hinge with Allen Key supplied.

STEP 3
Turn the tension pin clockwise to the next hole in tension pin,then tighten the grub screw, repeat this process a Maximum of three times or 360°, Do not over tension.

□□□□□□□□ □□□□□□□ □□□□□□ □□□ □□□-

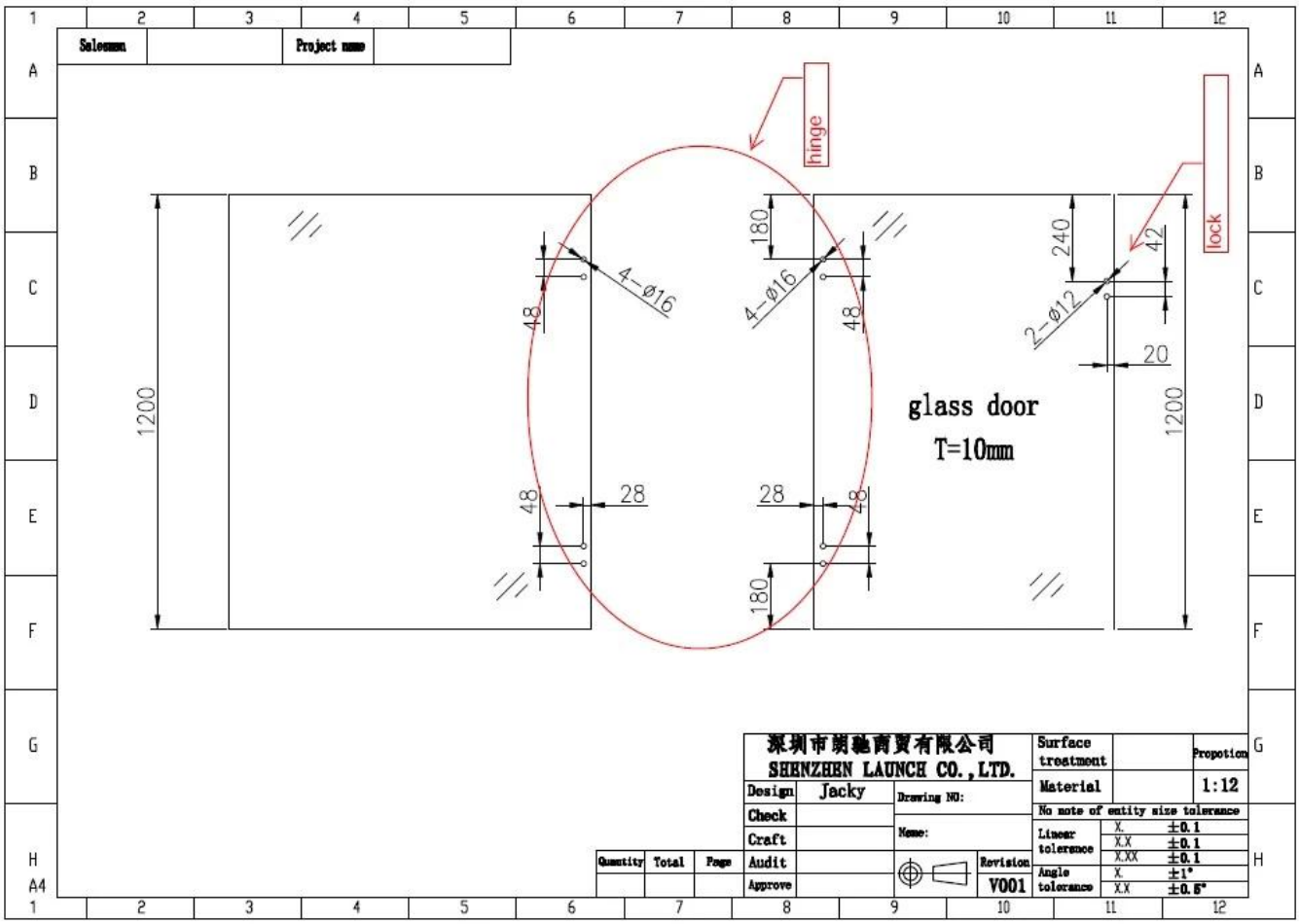
Salesman
Project name
hinge
lock
4-Ø16
4-Ø16
2-Ø12
180
48
48
240
42
20
1200
1200
28
28
48
48
180
glass door
T=10mm
深圳市朗驰商贸有限公司
SHENZHEN LAUNCH CO.,LTD.
Design
Jacky
Check
Craft
Audit
Approve
Drawing NO:
Name:
Revision
V001
Quantity
Total
Page
Surface treatment
Material
Propotion
1:12
No note of entity size tolerance
Linear tolerance
X. ±0.1
X.X ±0.1
X.XX ±0.1
Angle tolerance
X. ±1°
X.X ±0.5°
A4

□□□□□□ □□□□□□ □□ □□□□ □□□□□ -
□□□□□□□ □□□□□□ □□□ □□□□□□

KEBIL科比奥®

□□□□□□□□ □□□□□□□ □□□□

KEBIL科比奥®

□□□□□□□ □□□□□□□ □□□□□□ □□□-

□□□□□□□□ □□□□ □□□□ □□□□□ □□□-