□□□□□
□□□□□□□ □□□□□□□ □□□□□ □□□□ □□□ □□□□□□-
□□□□□- No.:G--R1
-□□□ :□□□□□□□ □□□□□
1000 □□□□) □□□□□□ □□□ 20 ≥ □□□□ □□ □□□□-x1000x8mm)
-□□ 16 □□□□□ :□□□□□ □□□ □□□□□□ □□□
□□□□□□□□□ □□□□□ 12 .□□□□ □□□□ □□ □□ □□□□□ □□□□□□□□ □□□ □□ □□□□ □□□□□□□ □□□□ :□□□□□□□□ □□□□□□□-
□□□□ □□□□□ □□
□□□□ □□□□□□□ □□□□ :□□□-
□□□□□ □□□□ □□/□□□ :□□□□□□□-
□□□□□□ □□□□ □□□ □□□□□□ □□□□□□ □□□□□□□ □□□□□□ □□□□□□□ □□□□□□□ □□□□□□□ □□□□□ □□□ :□□□□□□□-
□□□□□ □□□□□□ □□□□□
□□□□□□□□ □□□□□□ □□□□□ □□□□□□ □□□□□□ □□□□□□ □□□□□□□□--
(□□□□ □□□) □□□□□□□□ □□□□□□□ □□□□□ □□□--
□□□□□ □□□□□□ □□□□-

□□□□□□□□ □□□□□□

□□□□□□□□ □□□

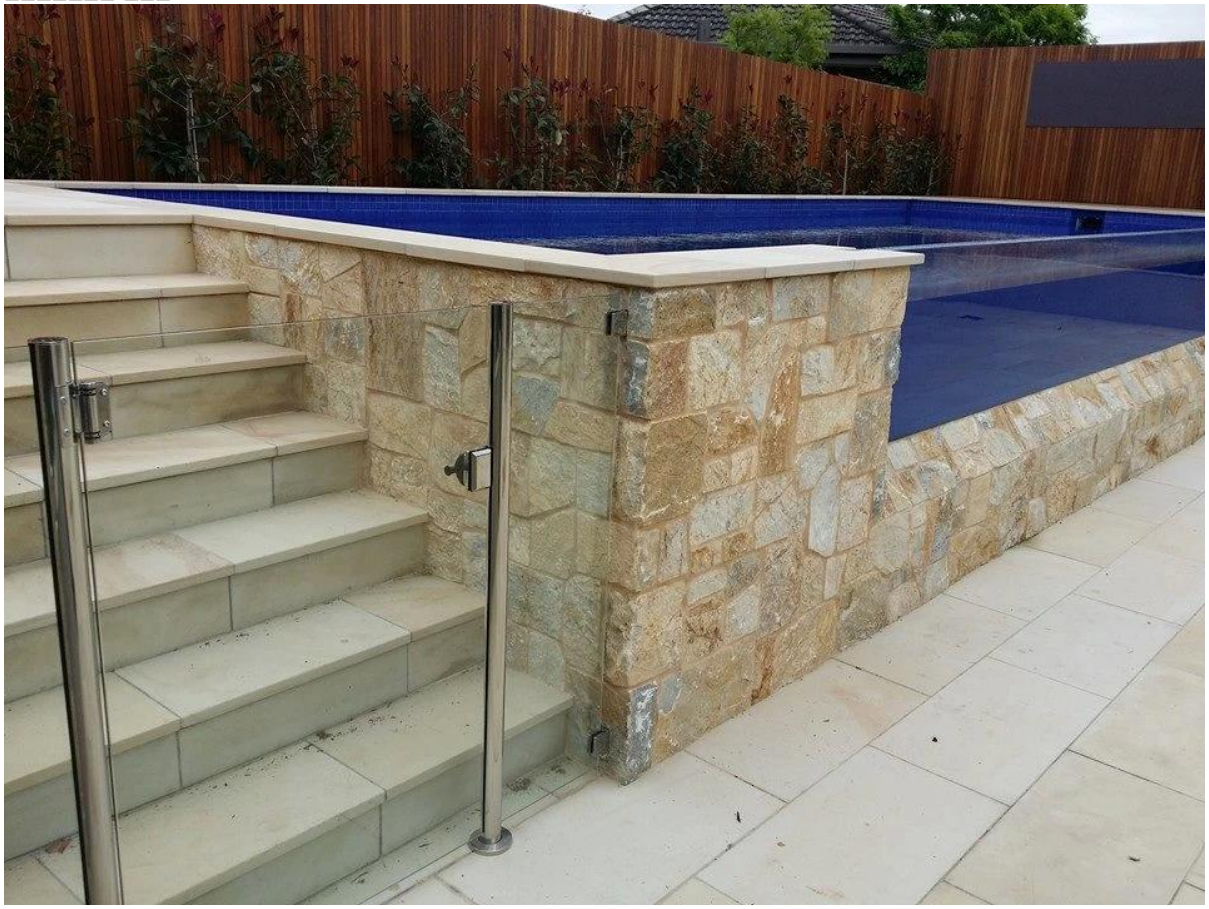

□□□□□□□□

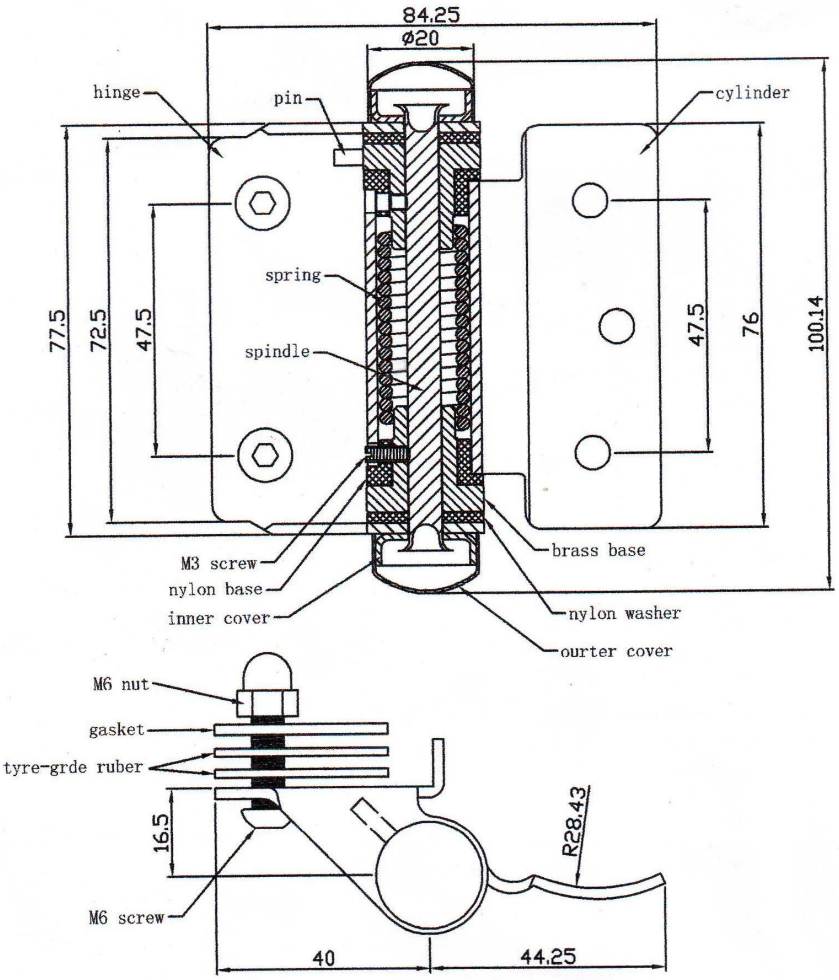
84.25
ø20
hinge
pin
cylinder
spring
spindle
77.5
72.5
47.5
47.5
76
100.14
M3 screw
nylon base
inner cover
brass base
nylon washer
ourter cover
M6 nut
gasket
tyre-grde ruber
16.5
R28.43
M6 screw
40
44.25

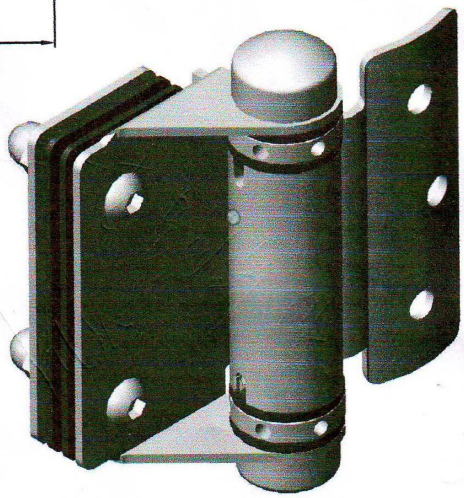

□□□□□□□□□ □□□□□

KEBIL科比奥
ISO
9001:2008
REGISTERED
Factory Audit
Shenzhen Launch Co.,Ltd
Factory Audit
Alibaba.com Trade Audit Report
Shenzhen Launch Co., Ltd.
launch-china.en.alibaba.com
Factory Audit
Trade Audit Report
launch-china.en.a
launch-china.en.alibaba.com
2013-2014
www.launch-china.cn

.□□□□□ □□□ □□□□□□ □□□□□□ □□ □□ □□□□□ □□□ □□□ □□□□□
□□□□ □□□ □□□□ □□ □□□□□ □□□□ □□□□ .□□□□□□□ □□□□□ □□□ □□ □□□□□□□ □□!

KEBIL科比奥®

深圳市朗驰商贸有限公司
SHENZHEN LAUNCH CO., LTD.
朗驰国际有限公司
LAUNCH INTERNATIONAL LIMITED.

季敏 Merlin Ji

Senior Sales Representative

(86) 189 6294 5180

深圳市南山区南山大道1092号亿利达大厦B区3栋5003

Room 5003, Building 3, Yilida Building, No.1092 Nanshan Road, Nanshan District, Shenzhen, China postal code 518054

(86-755) 8603 7559

(86-755) 8637 2611

sales06@launch-china.cn

www.launch-china.com

www.chinabalustrade.com