□□□□ Shenzhen Launch □□□□□□□ □□□□ □□ □□□□ □□□□ □□□□□□□□□□□ □□□□□ □□ □□□□□□ □□□□□□ □□□□□□ 304/316 □□□□□ □□□□□□□.

□□□□□	90 □
□□□□	304/316 □□□□□ □□□□□□□ □□□□□□□
□□□□□	□□□□□□ □ □□□□□□ □ □□□□□□□
□□□□□ □□□□□□ .□□□□	2100 □□
□□□□□ □□□ .□□□□	1000 □□
□□□□□□□□ □□□□□□□□ □□ □□□ □□□ □□□□□ □□□ .□□□□	45 □□□
□□□□□	□□□□□ □□□□ □□□□□□ □ □□□□□□ □□ □□□□□
□□□	1 □□□□ 2 = □□□

□□□□□□ □□□□ □□□□ □□□□ □□□□□□ □□□□□□ □□□-

□□□□□□□ □□□□□ □□□□ □□□□ □□□□□□□□□ □□□□□□□ □□□□□ □□□□□□□ -

B-90 B-180 Hydraulic Buffer Glass Door Hinges' Specification

Application range &glass door parameters :

1. This series of hydraulic glass hinge is suitable for tempered glass door without frame .
2. Suitable for MAX door height ≤ 2100mm
3. Suitable for MAX door width ≤ 1000mm
4. Glass door thickness :8-12mm
5. Maximum bearing weight of 45KG/2PCS

Glass door open cut reference graph (figure 1B -90 figure 2B - 180)

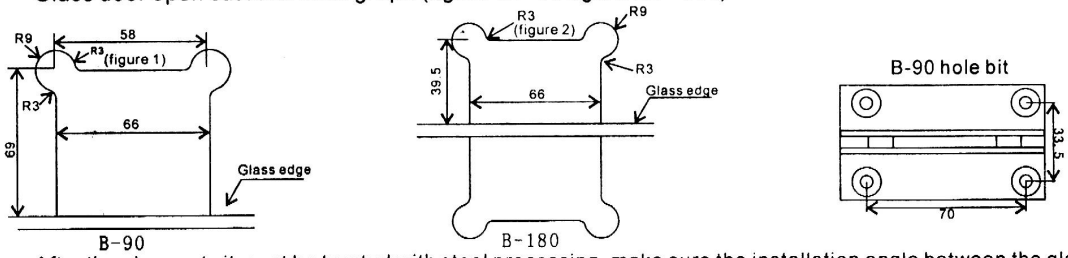

After the glass cut , it must be treated with steel processing ,make sure the installation angle between the glass door and the ground is 90°when you install it .

The hydraulic glass door hinge can be adjusted for closing strength for 1 .2 .3 degree

Note:the door must be completely closed before you need to adjust the closing strength .

The regulation method is as follows :

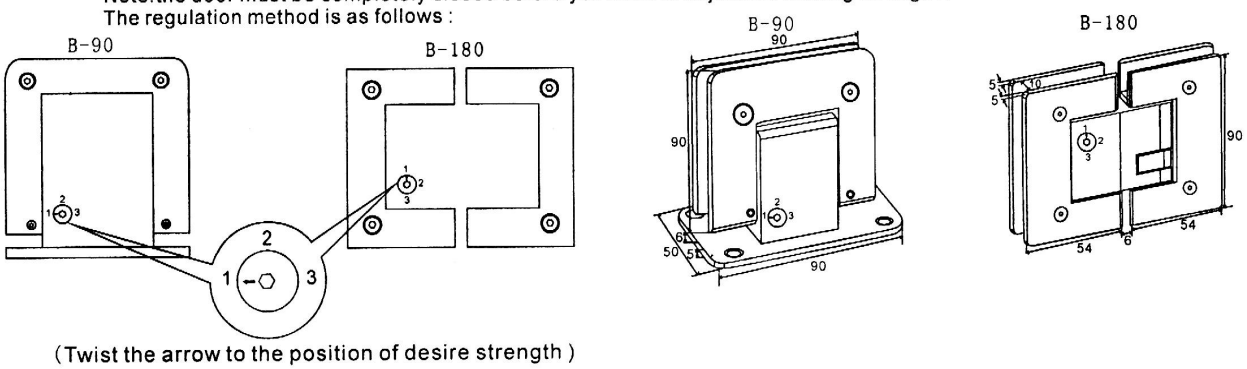

(Twist the arrow to the position of desire strength)

□□□□□□□ □□□□□□ -

1 □□□□□□□ □□ □□□ 10 □ □□□□ □□□□□ □□ □□□□□□□ □□□□-

□□□□□□ □□□□ □□□□□□ □□□□□□ □□□□□□□ □□□ -