□□ 12-8 □□□□ □□□□□□ □□□□□□□□ □□□□□□□ 304 □□□□□ □□□□□□□ □□□□□□□ □□ □□□□□□□□□ □□□□□ □□□□

□□□□□	□□□□□□ □□□ □□□□□□ □□ □□□□ 90 □□ □□□□□
□□□□	□□□□□□□□□□□ □□□□□ □□□□□□□ □□□□□□□
□□□□□	□□□□□□ □ □□□□□□ □ □□□□□□□
□□□□□ □□□□□□ .□□□□	2100 □□
□□□□□ □□□ .□□□□	1000 □□
□□ □□□ □□□ □□□□□ □□□ .□□□□ □□□□□□□□ □□□□□□□□	45 □□□
□□□□□	□□□ □□□□□□ □□□□□□□□ □□□□□□□ □□□□□□ □□□□ □□□ □□□□□□ □□□□□ □□□ □□□.
□□□	1 □□□□ 2 = □□□

□□□□□□ □□□□□□□□ □□□□□□□ □□□□□□□ □□□□□□□□□□□ □□□□□□ 304 □□□□□ □□□□□□□ □□□□□□□ □□ □□□ 12-8mm-

□□□□□□□□□□□□□ □□□□□□ □□□□□□ □□□□□ □□□□□□□-

B-90 B-180 Hydraulic Buffer Glass Door Hinges' Specification

Application range &glass door parameters :

1. This series of hydraulic glass hinge is suitable for tempered glass door without frame .
2. Suitable for MAX door height ≤ 2100mm
3. Suitable for MAX door width ≤ 1000mm
4. Glass door thickness :8-12mm
5. Maximum bearing weight of 45KG/2PCS

Glass door open cut reference graph (figure 1B -90 figure 2B - 180)

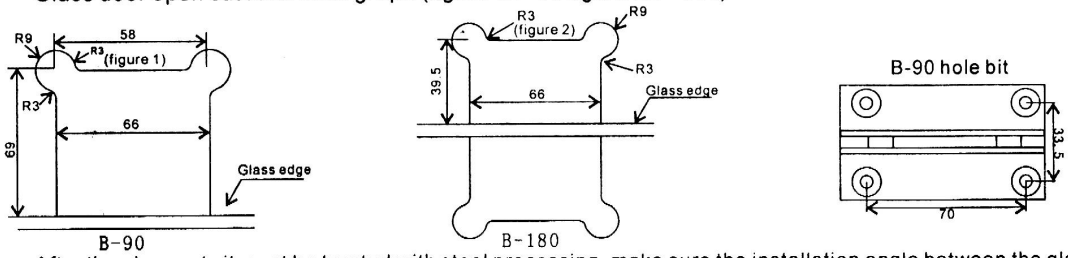

After the glass cut , it must be treated with steel processing ,make sure the installation angle between the glass door and the ground is 90°when you install it .

The hydraulic glass door hinge can be adjusted for closing strength for 1 .2 .3 degree

Note:the door must be completely closed before you need to adjust the closing strength .

The regulation method is as follows :

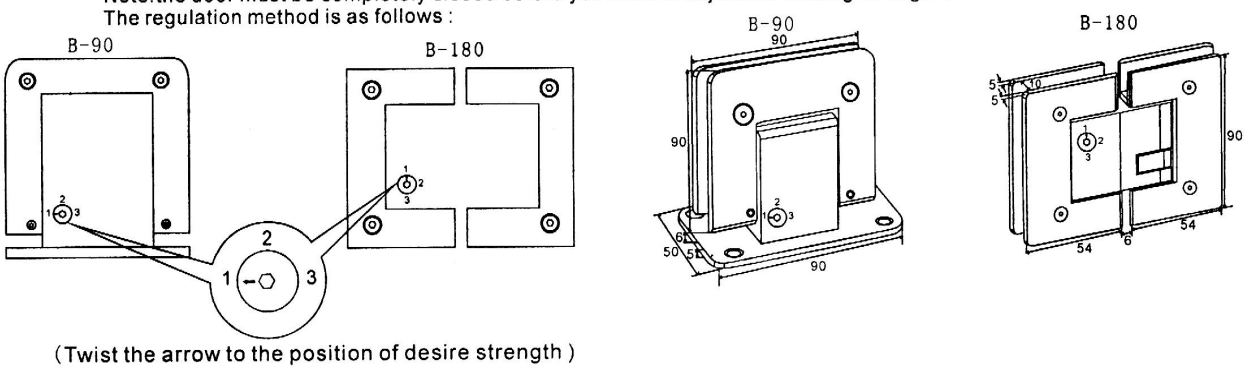

(Twist the arrow to the position of desire strength)

□□□□□□□ □□□□□□ -

1 □□□□□□□ □□ □□□ 10 □ □□□□ □□□□□ □□ □□□□□□□ □□□□-

□□□□□□□□□□□□□ □□□□□□□□ □□□ □□□□□□□□ □□□□□□□□□ □□□□□□ □□□□□□□ □□□-