2 "Edelstahl AISI304 / 316 Glaszaun Abstandshalterung für gehärtetes Glas Geländersystem Spezifikationen:

Produktname	2 "Edelstahl AISI304 / 316 Glaszaun Abstandshalterung für gehärtetes Glas Geländersystem
Material	Edelstahl 304/316
Anderer Name	Glaszaunabstandshalter, Glasabstandsbolzen, Abstandhalter für Glas
Fertig	Hochglanzpoliert oder satiniert
Glasabstandsgröße	2 "Durchmesser mit einer 1-3 / 4" Basis, Kappendicke 3/8 "
Für Glasdicke	12 und 19 mm (1/2 "und 3/4") gehärtetes Glas
Gebohrtes Glasloch	Durchmesser 12mm in Glas erforderlich
Nettogewicht	910 g / Stück
Montage	Wandmontage / Seitenmontage / Blendenmontage
MOQ	10 Stück
Probe	Verfügbar
OEM & ODM-Service	Akzeptabel
Anwendung	Design von Innen- und Außentreppen, Balkongeländer, rahmenloses Deckglasgeländer, Juliet-Balkongestaltung, schwebende Treppe
Fabrik Inspektion	Verfügbar

2 "Durchmesser Abstandskappe und Sockel zur Montage auf Holzuntergrund:

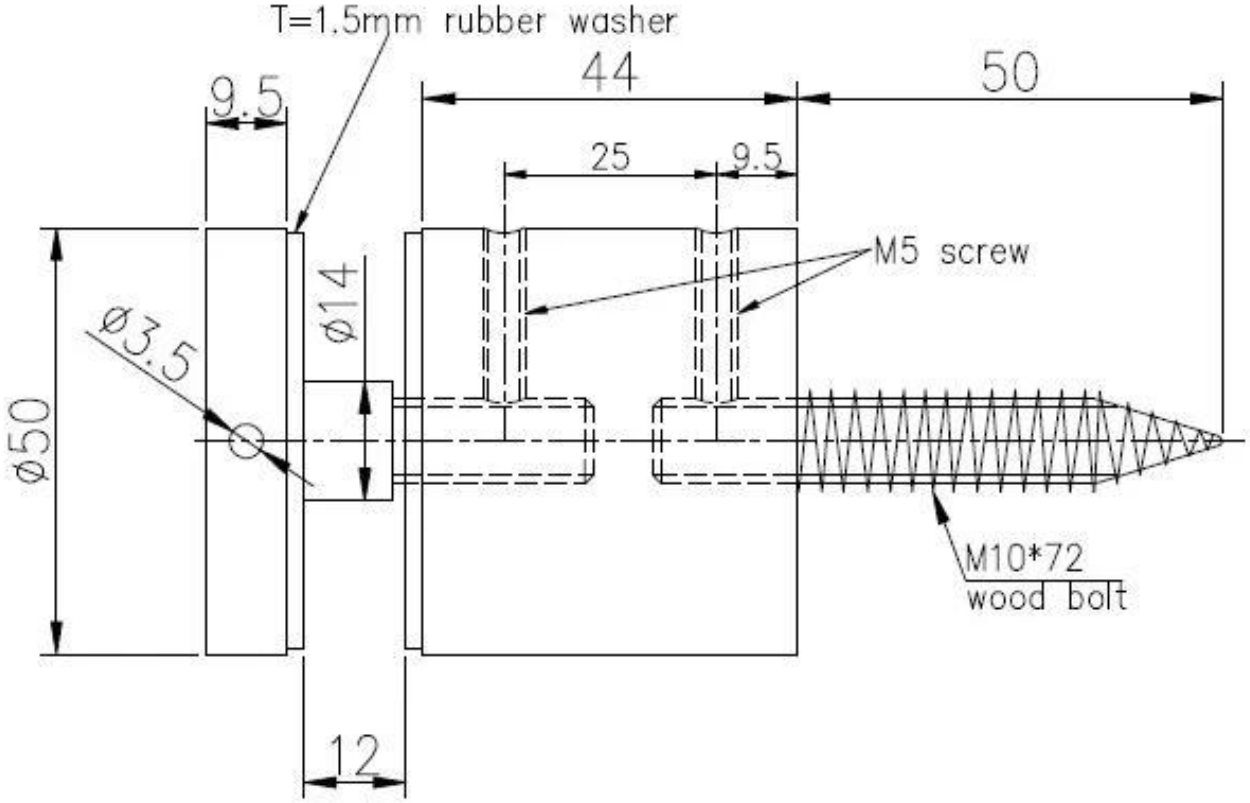

:

2 "Durchmesser Abstandskappe und Sockel zur Montage auf Betonuntergrund:

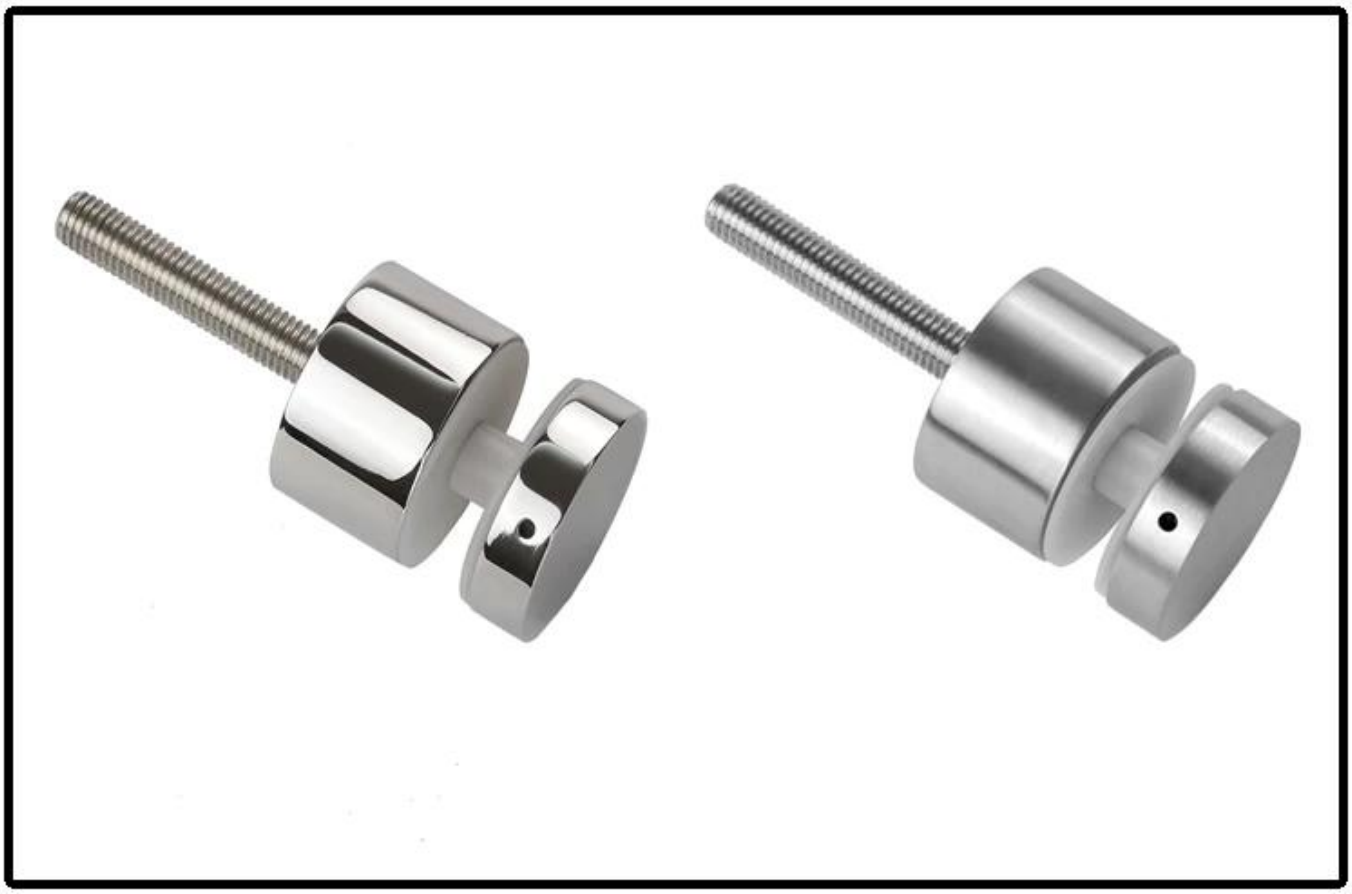

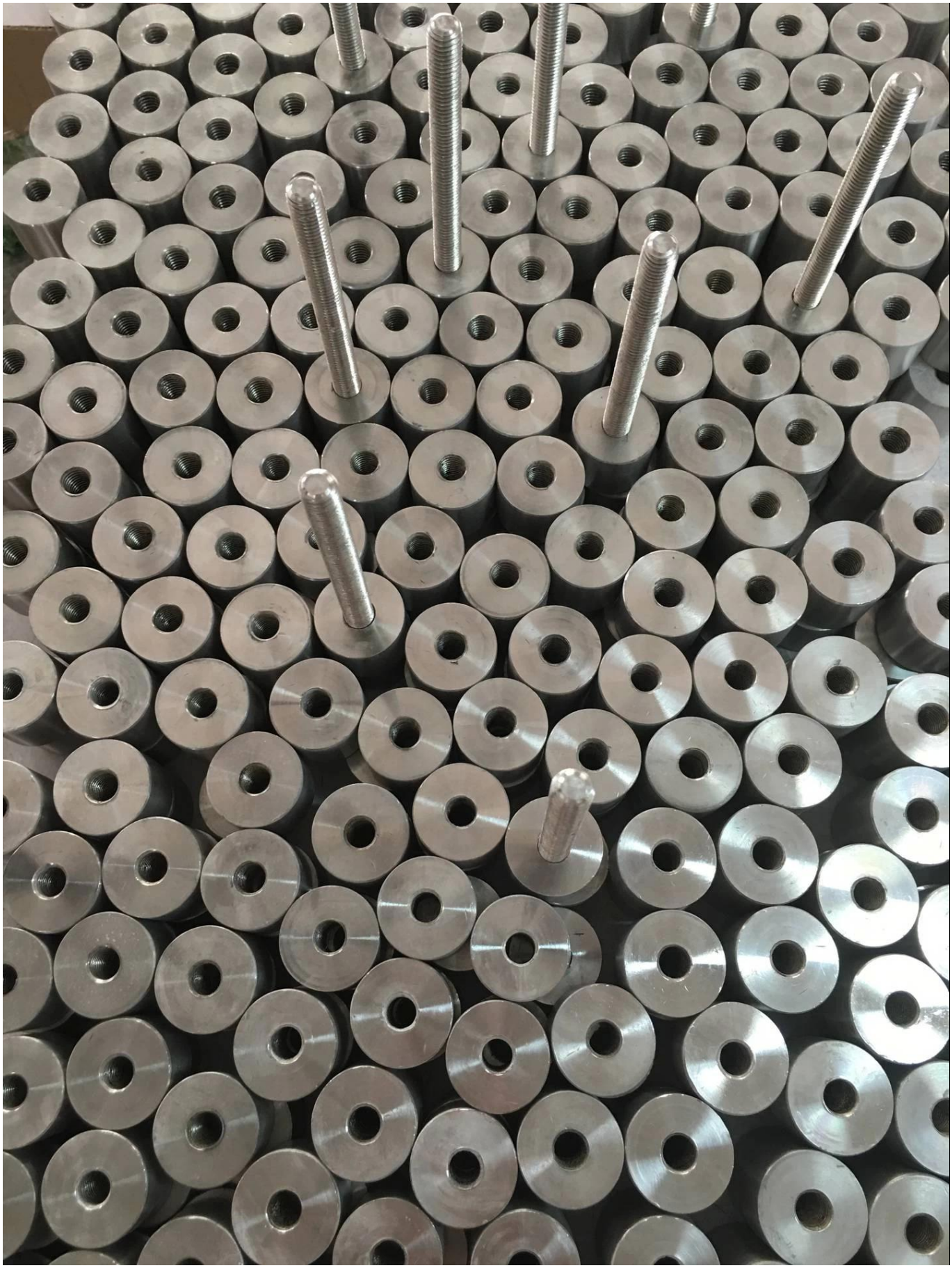

Projektfotos:

Abstandshalter aus Edelstahlglas für rahmenlose Glasbalustraden

Firmeninfo:

Shenzhen Launch Co., Ltd was established in 2004, located at Nanshan District, Shenzhen, and one hour by car from Hongkong International Airport. Our main product is high-grade building materials includes stainless steel balustrade post, staircase handrail, balcony guardrail, swimming pool fence and other high-grade building materials. All the products are designed strictly according to the high-end market requirements. We have our own factory in Tangxia Town, Dongguan, has a variety of precision equipment more than 50 sets: CNC lathe, milling machine, punching machine, pipe cutter, argon welder, drilling machine, polisher, etc. which can provide customers with complete product processing services. With the German SPECTRO Spectrometer, we insist on testing every batch of materials to ensure that the material is highly qualified. We also have hardness gauge, secondary element and other test equipment to ensure the products meets customers' requirements.

ABOUT US

OUR ADVANTAGE

Please do not hesitate to contact us if you have any requirement regarding our production lines, you can expect a timely reply with professional solutions!

Own factory, shortest lead time.

Can help customers design product drawings based on customer ideas and design engineering installation drawing according to the customer site sketch.

Sample order, trial order acceptable.

Provide material test report to ensure that the material is qualified.

13 years of industry experience, we can help customers recommend the best solution to help customers save cost.

OUR FACTORY

More than 13 years experience in hardware industry design and processing, we can provide customized services from design to the sample and small batch trial production.

OUR CERTIFICATE

With premium quality, competitive price and superior service, we won a lot of customers' favor.
Our products are popular in North America, European and Australia.

PRODUCTION PROCESS

Casting

CNC lathe

CNC Milling

Stamping

Drilling & Tapping

Polishing

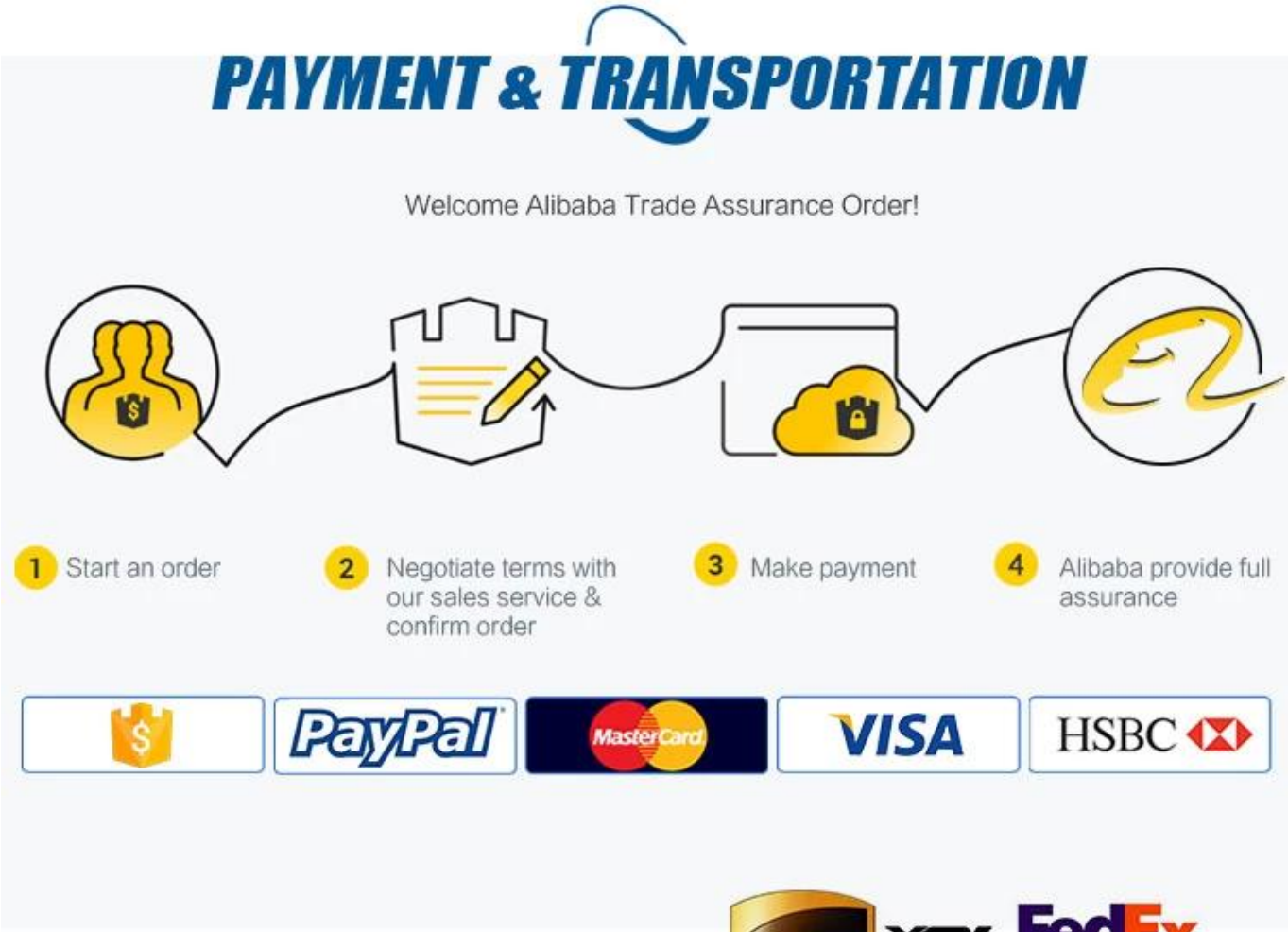

Kontaktieren Sie uns jetzt für weitere Informationen!
Email: sales03@launch-china.cn

Mob: +8615907334556