Verstellbare Duplex 2205 Matte schwarz quadratische Grundplatte Glaszapfenmodell # SBM für rahmenlose Glasgeländer Schwimmbadzaun usw.

Unser verstellbarer Glaszapfen ist mit 4 zusätzlichen kleinen Löchern und Schrauben an der Grundplatte und 1 PC-Nivellierplatte, die am Boden des Zapfens verwendet werden soll, um den Niveau anzupassen, wenn der Boden nicht einmal ist.

1. Merkmale des verstellbaren Duplexes 2205 mattschwarzes quadratisches Basisplatte Glaszapfen, SBM

MaterialvonZapfenhauptsächlichKarosserie	Duplex 2205.
Material für Schrauben, Basisabdeckung, Nivellierplatte	316 Edelstahl.
Beenden	Matte schwarze Pulverbeschichtung oder Elektroablagerung; Satin; Spiegel
Glasdicke.	10-13.52mm Dickenglas.
Höhe	168mm; oder kann angepasst werden
Kunststoffdichtung.	Hergestellt aus Nylonmaterial, kann es für eine lebenslange Zeit dauern
Betonschraube anpassen	M8 * 100.
Gewicht des Einheitsgewichts pro PC	1.45kg
Auf Lager	Jawohl
Moq.	2 stück

2MaßevonSbmGlasZapfen-

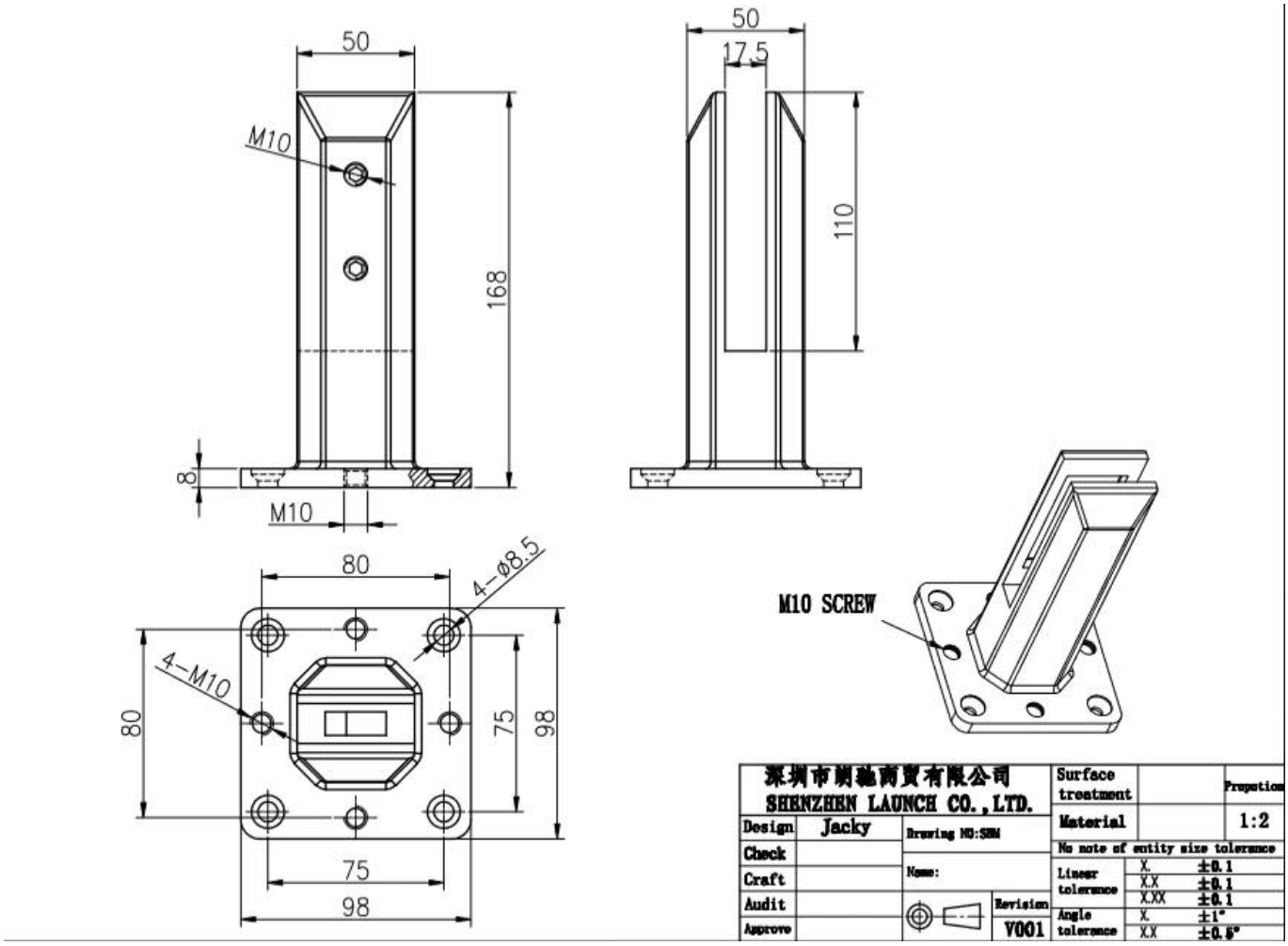

3.Wird geladenPrüfung&MaterialPrüfungzumSbmGlasZapfen-

LOADING TEST FOR SBM

Introduction

MTS Metallurgical Testing Services was engaged to witness the installaton of a sample pool fence spigot and to subsequently conduct load tests on the spigot to the requirements of Australian Standard AS1926.1 2012.

Standard/Specification AS 1926.1 2012, Section 3.2 and Appendix B

Results Summary
(For details of individual tests, refer to the tables on the following pages.)

ID	Item/Heat No.	Dimensions/Type/Details	Finish	Overall Assessment
14117/01	SSBM316	50mm Square, Base Plate 316 Stainless steel	316l	COMPLIES

Remarks

After completion of the testing, the spigot was found to be in sound condition with no breakage, tearing or signs of fracture and no looseness of the fixings.

Colin Lorimer
Metallurgical Testing Manager

NATA Accreditation No: 15624
Accredited for compliance with ISO/IEC 17025

Strength Test

Test Specification AS 1926.1 - 2012, Appendix B

Test Procedure MTS-TP3.1 Compression Tests - Products

Specimen ID	Observations	Assessment
14117/01	Test Equipment: Hydraulic ram and 10,000 N load cell Test Load: 330N Load Duration: 45 Secs Deflection under load: 1 mm Permanent Deflection after removal of test load: 0 mm	COMPLIES

Requirements No permanent damage or loosening of fixings.

SPECTRO

12/16/2020 5:54:18 PM

Method: Fe-30

12/16/2020 5:54:09 PM

Comment: Cr-, Cr/Ni-steel

Type corr.concentr.

Type Standard 18--8

Sample Name:

Sample ID:

	C	Si	Mn	P	S	Cr	Mo	Ni
	%	%	%	%	%	%	%	%
< x > (1)	0.0224	0.8873	1.1010	0.0263	0.0032	21.6796	3.0718	5.5691

	Al	Co	Cu	Nb	Ti	V	W	Pb
	%	%	%	%	%	%	%	%
< x > (1)	< 0.0005	0.0797	0.1603	< 0.0002	0.0044	0.0893	0.0305	< 0.0002

	Sn	Sb	B	N	Fe			
	%	%	%	%	%			
< x > (1)	0.0092	< 0.0004	0.0024	0.1024	67.1600			

4InstallationAnweisungenzumSbmGlasZapfen-

fixing method: base plate spigots

Mark out the centre line of proposed glass fence with a chalk line. Determine clamp location based on a sheet size (recommendation on pages 1 & 2). Use base plate as a template to mark out the hole positions and drill holes to suit.

Note: Do not exceed 100mm gaps between glass panels. Optimum gap is 40mm to 60mm

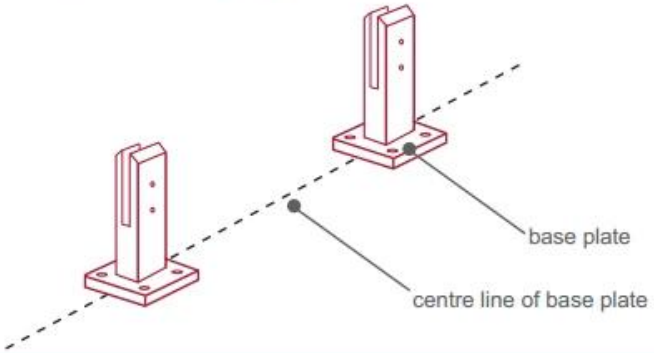

Now the base plated spigots can be fitted to the floor and plumbed via shims (not supplied) under the base plates. Be sure to tighten firmly as the smallest of movement at the base plate will result in noticeable movement at the bottom of the glass fence.

Tip: By setting the two outer spigots of your total span, a string line can be run in the 'throat' of the spigots, giving correct height for all spigots in between

Note: Do not exceed 100mm gap from the fixing surface to the bottom of the glass

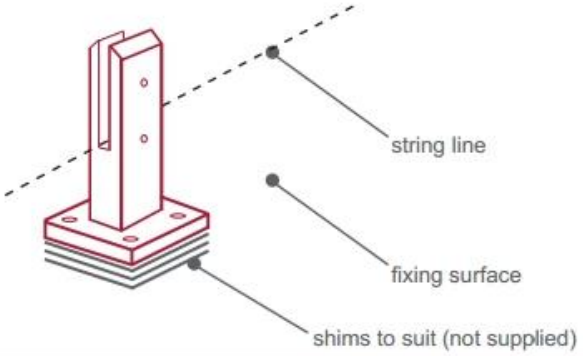

When all spigots are installed, slip domical cover the top of the spigot to hide fixings. It will be necessary to turn the adjustment screws on the spigot face all the way in to allow cover to pass over

Note: Same installation method applies to round base plate spigot

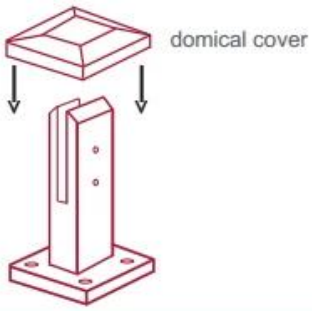

The glass is then installed to the spigots.
Place plastic packers between glass & spigot, at no stage should glass touch the metal

How adjustability works:

1. Place glass in spigot
2. Fix/ tension glass both sides with allen key

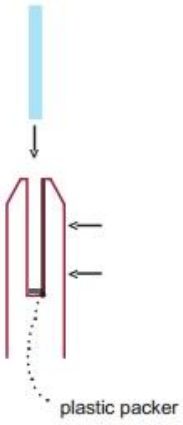

5VerpackungEinzelheitenzumSbm-

1 Stück in eine weiße Box; 12 PCs in einen Karton-

2014/03/19

6.MasseProduktionVerfahrenzumSbmGlasZapfen-

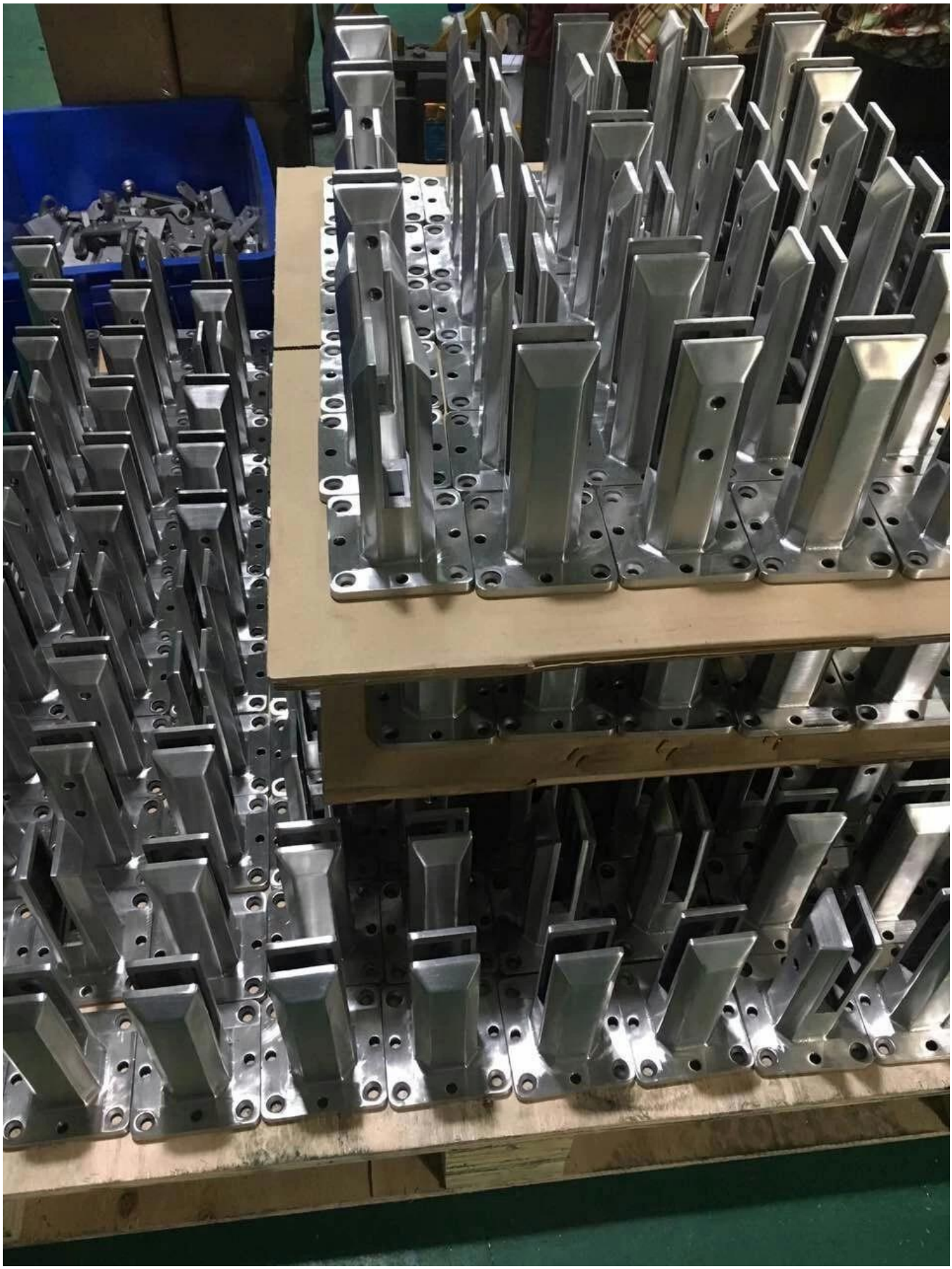

7.MehrModellevonGlasZapfenzumIhreAuswahl-

Glass spigot

MODEL # SBM

MODEL # SCM

MODEL # RBM

MODEL # RCM

8ProjektFotosvonRahmenlosGlasGeländermitGlasWinkel-

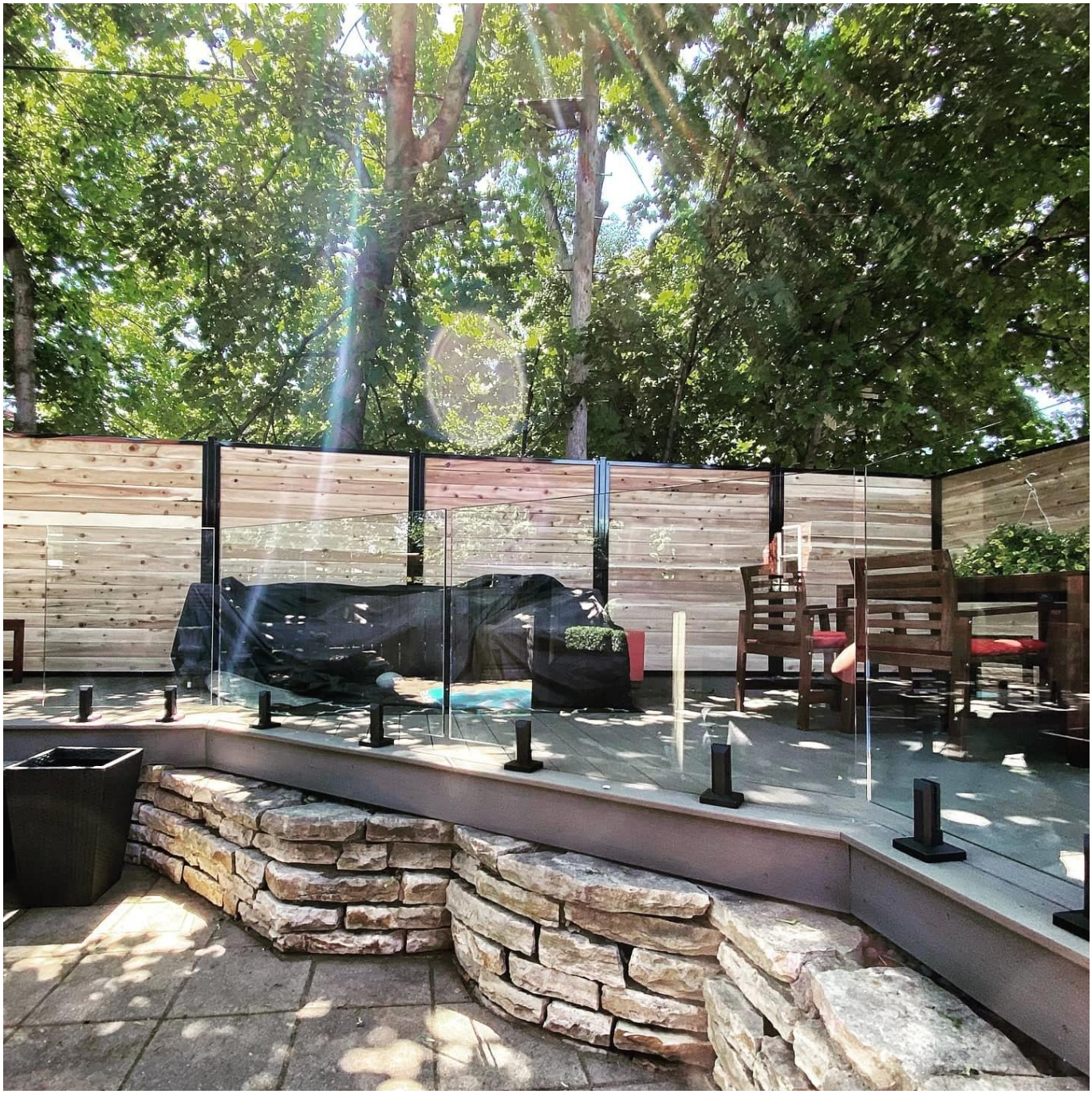

Wir haben auch Glasscharnier & magnetische Latches & Glasklemmen und gehärtetes Glas mit dem gesamten rahmenlosen Glasgeländersystem.

Fühlen Sie sich frei, uns jetzt zu kontaktieren, um Zitate zu bekommen!

Shenzhen Launch Co., Ltd
Überprüft von SGS, Bericht Nr. 19536352_P + T
Büro hinzufügen:
B5-003, 5 / F-Block 3, Yilida-Gebäude, Nr. 1092 Nanshan Road, Nanshan District, Shenzhen, China, Postleitzahl 518054

Tel: 86-755-86037559 Fax: 86-755-86372611

Mob (WhatsApp, Wechat, Viber) +86 135 9027 3543

Kontakt:CeliaChen