China fertigt Edelstahl-Glasgeländer-Designs

1.	Material und Finish.	304/316 Edelstahl; Satin-Finish oder Spiegel
2	Höhe	1000mm / benutzerdefinierte Größen
3	STUCHEON POST.	D50.8 * 1,5 (mm) Röhre; 4-Wege verstellbare obere Eisenbahnhalterung; Quadratische oder runde Glasklemme.
4.	Top-Schiene.	D50.8 * 1,5 (mm) Kabelrohr
5.	Sicherheitsgeländer	10 mm / 12mm Transparent Tempered Glass Panel
6.	Du siehst Position	Baluster, Balustrade, Geländer, Zaun, Handlauf, Geländer; Balkon, Brücke, Brücke, Garten, Terrasse, Swimmingpool, Veranda, Treppe, Terrasse
7.	Installation	Top / Seite montiert
8.	Paket	EPE + Innenbox + Karton

ProduktShow

TechnischZeichnung

LCH-106

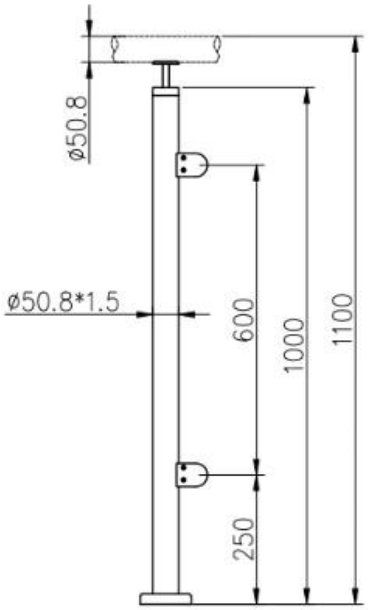

LCH-107

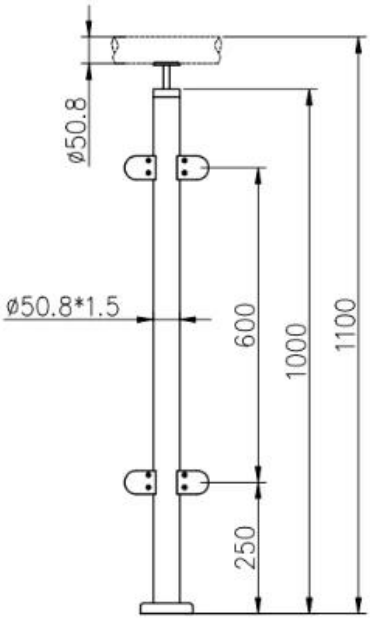

LCH-108

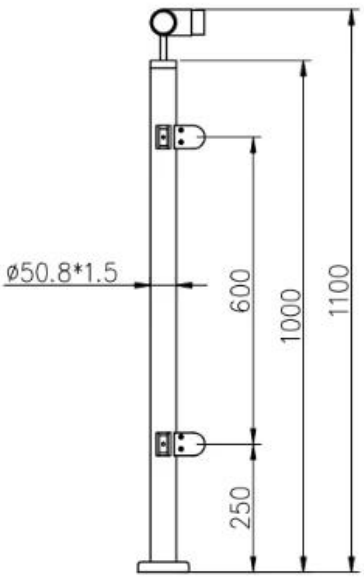

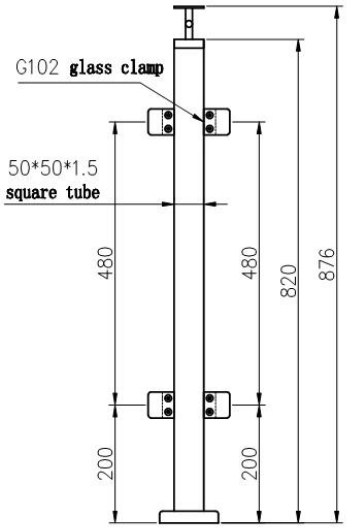

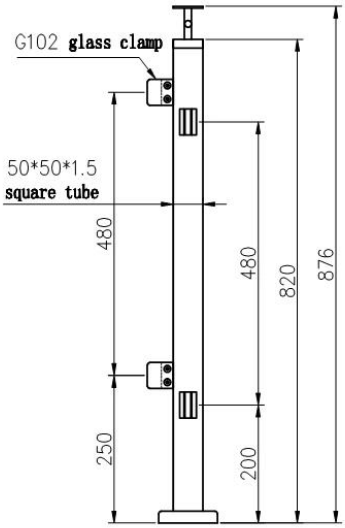

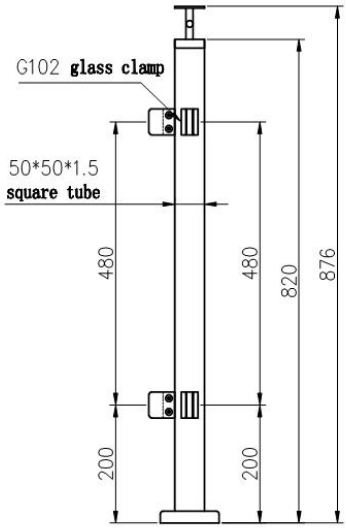

Installation:

Glass Clamp Installation Guide

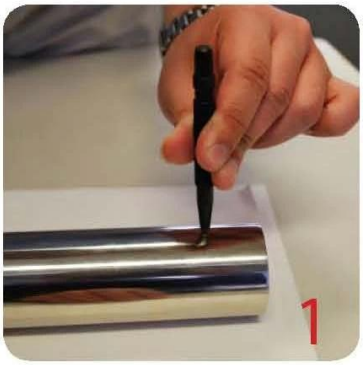

Mark and centre punch desired location of blind rivet nut location.

Drill centre punched hole in tube to suit blind rivet nut.

Insert blind rivet nut into tube and fasten with blind rivet tool.

Check installed blind rivet nut is secure and ready for install.

Align half glass clamp with blind rivet nut inline position. Screw in button head cap screw into thread and tighten with hex key.

Select appropriate rubber gasket to suit glass panel thickness. Install rubber gasket into both sides of glass clamp. (Note rubber gasket marked with sizes).

If heavier clamping load is required please use supplied glass clamp pin, during the install process. Note glass panels will require drilling in order to fit glass clamp pins.

Fit glass panel into position, install second half of glass clamp secure with provided hex screws.

Tighten glass clamps with hex key, and check glass panel are secure with no movement.

Projekthow:

China fertigt Edelstahl-Glasgeländer-Designs

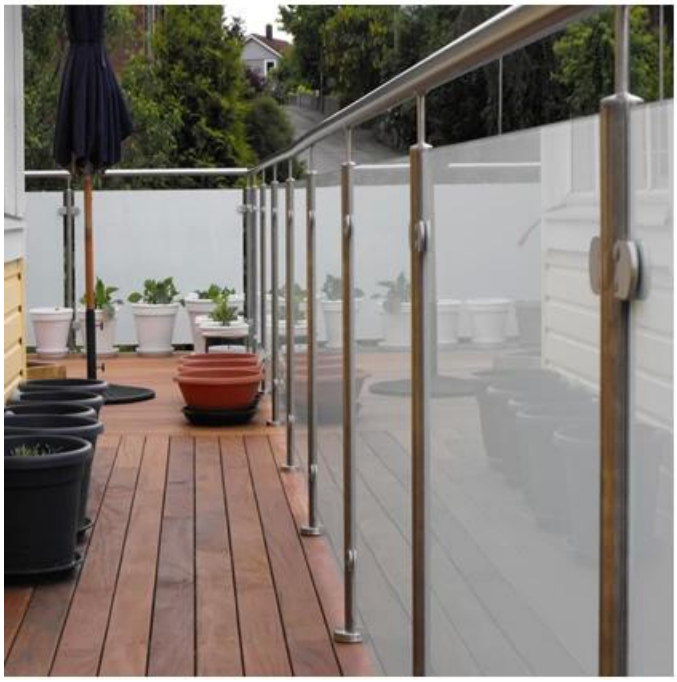

Willkommen zukontaktiere mich für mehr Details:
Wendy: sales04@launch-china.cn.
HP / WhatsApp / Wechat: +8615989339827