Marine Grade Edelstahl Duplex 2205 Basishalterung Quadratischer Glaszapfen Australischer Standard für rahmenlosen Glaszaun.

Eigenschaften -

- Modell Nr. SBM
- Material - Duplex 2205, SS 316, SS316L, SS304
- Finish-Satin, Spiegel, Schwarz, Gold, Weiß usw.
- Höhe 168mm
- Bodenabdeckung, Kunststoffeinsatz, verstellbare Schrauben enthalten
- 1 PC in einer weißen Schachtel verpackt;12 Stück in einen Karton

Fotogalerien -

KEBIL科比奥®

KEBIL科比奥®

Zeichnung-

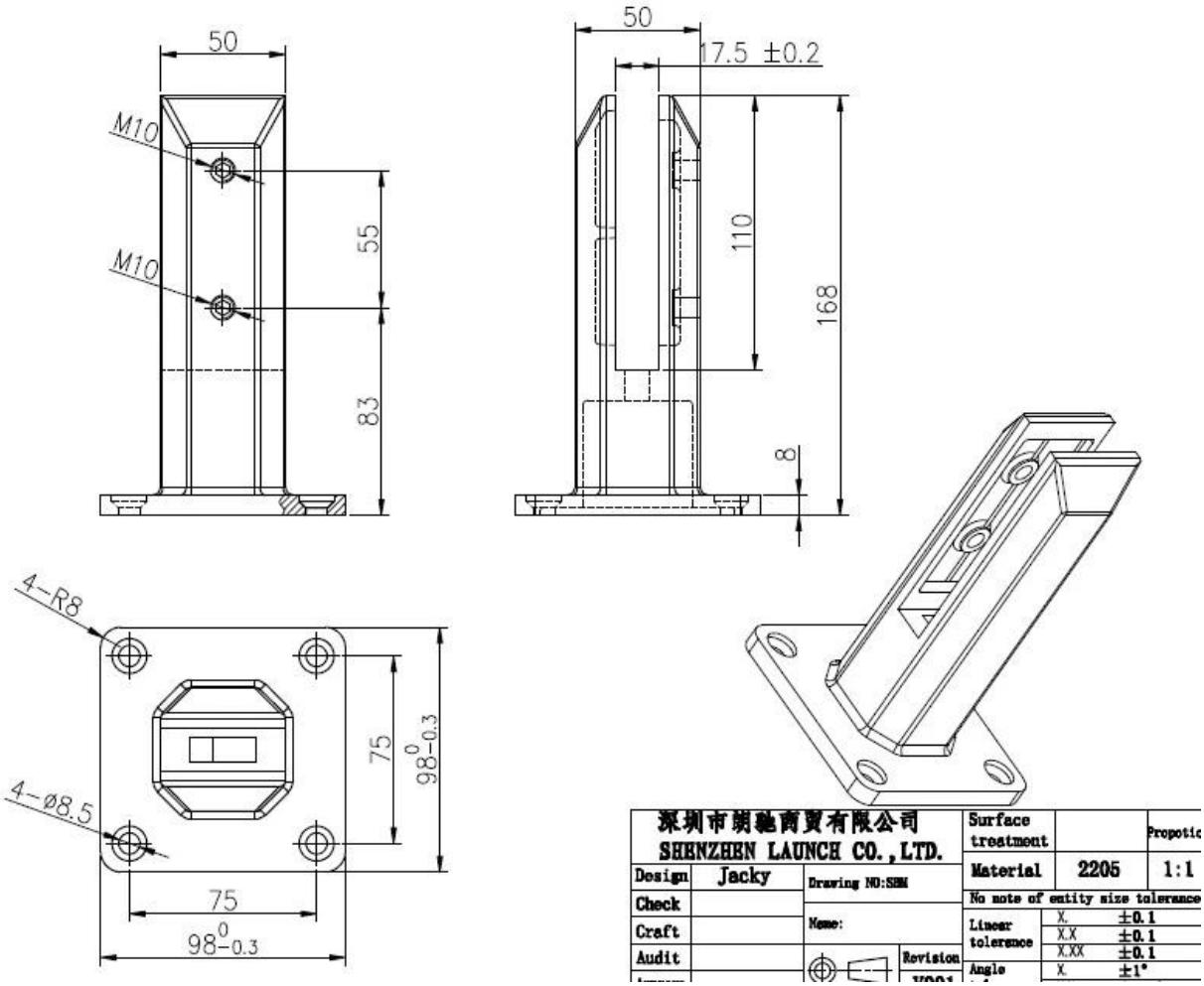

Duplex 2205 Materialprüfbericht-

SPECTRO

12/16/2020 5:54:18 PM

Method: Fe-30

12/16/2020 5:54:09 PM

Comment: Cr-, Cr/Ni-steel

Type corr.concentr.

Type Standard 18--8

Sample Name:

Sample ID:

	C	Si	Mn	P	S	Cr	Mo	Ni
	%	%	%	%	%	%	%	%
< x > (1)	0.0224	0.8873	1.1010	0.0263	0.0032	21.6796	3.0718	5.5691

	Al	Co	Cu	Nb	Ti	V	W	Pb
	%	%	%	%	%	%	%	%
< x > (1)	< 0.0005	0.0797	0.1603	< 0.0002	0.0044	0.0893	0.0305	< 0.0002

	Sn	Sb	B	N	Fe			
	%	%	%	%	%			
< x > (1)	0.0092	< 0.0004	0.0024	0.1024	67.1600			

Schwarze Farbe SBMGlasZapfen-

KEBIL科比奥®

Model : SBM

MATT BLACK ELECTRO PLATING

MATT BLACK ELECTRO PLATING PROCESS

LOADING TEST FOR SBM

Introduction

MTS Metallurgical Testing Services was engaged to witness the installaton of a sample pool fence spigot and to subsequently conduct load tests on the spigot to the requirements of Australian Standard AS1926.1 2012.

Standard/Specification AS 1926.1 2012, Section 3.2 and Appendix B

Results Summary
(For details of individual tests, refer to the tables on the following pages.)

ID	Item/Heat No.	Dimensions/Type/Details	Finish	Overall Assessment
14117/01	SSBM316	50mm Square, Base Plate 316 Stainless steel	316l	COMPLIES

Remarks

After completion of the testing, the spigot was found to be in sound condition with no breakage, tearing or signs of fracture and no looseness of the fixings.

Colin Cousins
Metallurgical Testing Manager

NATA Accreditation No: 15624
Accredited for compliance with ISO/IEC 17025

Strength Test

Test Specification AS 1926.1 - 2012, Appendix B

Test Procedure MTS-TP3.1 Compression Tests - Products

Specimen ID	Observations	Assessment
14117/01	Test Equipment: Hydraulic ram and 10,000 N load cell Test Load: 330N Load Duration: 45 Secs Deflection under load: 1 mm Permanent Deflection after removal of test load: 0 mm	COMPLIES

Requirements No permanent damage or loosening of fixings.

Projektgalerien für quadratischen Glaszapfen, SBM-

SHENZHEN LAUNCH CO., LTD

SHENZHEN LAUNCH CO., LTD

SHENZHEN LAUNCH CO., LTD

SHENZHEN LAUNCH CO., LTD