Edelstahl 304 hydraulisches Glasscharnier für 8-12 mm Badezimmerglastüren

Modell	90 Grad Glas-Wand-Duschscharnier
Material	Edelstahl, Aluminium
Fertig	Satin, Spiegel, schwarz
Max. Türhöhe	2100mm
Max. Türbreite	1000mm
Max. Türgewicht pro Paar Glasscharnier	45 kg
Anwendung	Glastüren für Duschwannen, Bürogebäude, Hotels, Apartments usw.
MOQ	1 Paar = 2 Stk

Fotos von hydraulischem Glasscharnier aus Edelstahl 304 für 8-12 mm Badezimmerglastüren-

Installationsanweisungen für hydraulische Glasscharniere

B-90 B-180 Hydraulic Buffer Glass Door Hinges' Specification

Application range &glass door parameters :

1. This series of hydraulic glass hinge is suitable for tempered glass door without frame .
2. Suitable for MAX door height ≦ 2100mm
3. Suitable for MAX door width ≦ 1000mm
4. Glass door thickness :8-12mm
5. Maximum bearing weight of 45KG/2PCS

Glass door open cut reference graph (figure 1B -90 figure 2B - 180)

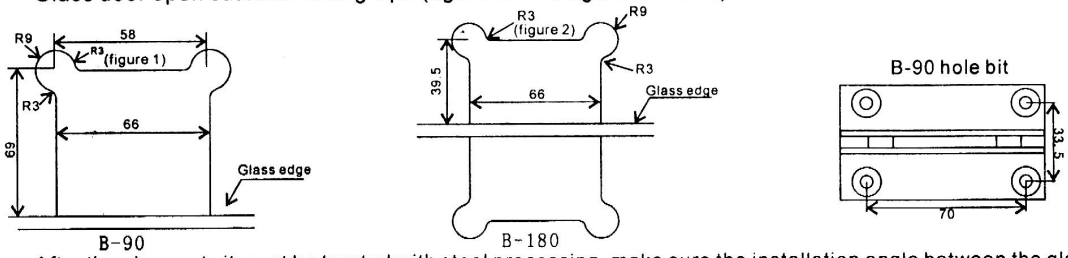

After the glass cut , it must be treated with steel processing ,make sure the installation angle between the glass door and the ground is 90°when you install it .

The hydraulic glass door hinge can be adjusted for closing strength for 1 .2 .3 degree

Note:the door must be completely closed before you need to adjust the closing strength .

The regulation method is as follows :

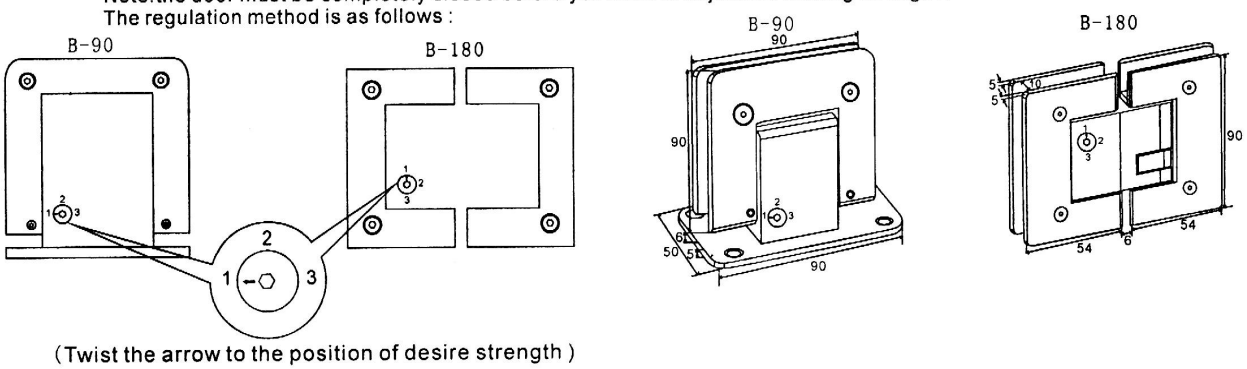

(Twist the arrow to the position of desire strength)

Verpackungsdetails -
1 Stück in eine weiße Schachtel, 10 Stück in einen Karton

Projektfotos von Glasduschtüren mit hydraulischen Scharnieren