Soporte de separación de vidrio, Tornillos de separación de vidrio, Separador de pared de vidrio Presupuesto:

nombre del producto	Soporte de separación de vidrio, Tornillos de separación de vidrio, Separador de pared de vidrio
Material	Acero inoxidable 304/316
Otro nombre	Separador de vidrio, barandilla de vidrio separador
Terminar	Espejo pulido, o satinado prensado.
Tamaño de la pata de vidrio	Tapa de 50x12 mm, cuerpo de 50 x 30 mm, perno M12 * 120 mm, junta de goma de silicona incluida
Para espesor de vidrio	12-19mm, o según los requisitos de clientes
Agujero de vidrio perforado	Diámetro 14mm requerido en vidrio
Peso neto	750 g / pieza
Montaje	montaje en pared / montaje lateral / montaje en panel frontal
MOQ	10 piezas
Muestra	Disponible
OEM y & Servicio de ODM	Aceptable
Solicitud	Diseño de escaleras interiores y exteriores, barandilla de balcón, barandilla de vidrio sin marco de cubierta, diseño de balcón Juliet, escalera flotante
Inspección de fábrica	Disponible

Dia 50mm Separador de cristal / botón en **Acabado satinado**:

Dia 50mm Separador de cristal / botón en **Acabado espejo**:

Con tornillo de madera para montaje sobre sustrato de madera:

Dibujo técnico:

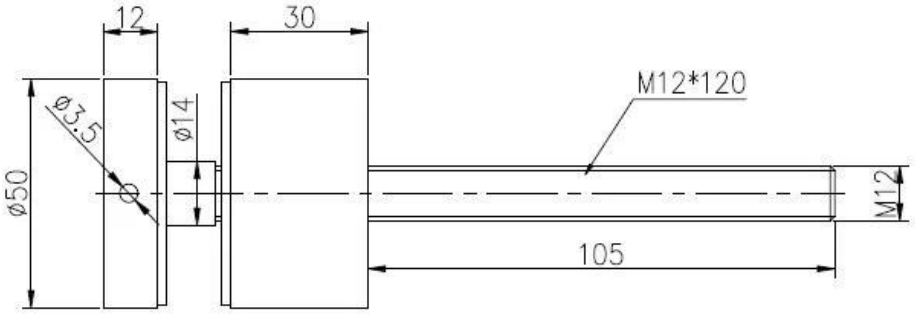

Salesman		Project name	

深圳市朝驰商贸有限公司 SHENZHEN LAUNCH CO.,LTD.			
Design	Jacky	Drawing NO:	
Check			
Craft		Name:Standoff	
Audit			Revision
Approve			V001

Quantity	Total	Page

Surface treatment		Propotion
Material	SS 316	1:1
No note of outity size tolerance		
Linear tolerance	X.	±0.1
	X.X	±0.1
	X.XX	±0.1
Angle tolerance	X.	±1°
	X.X	±0.5°

A4

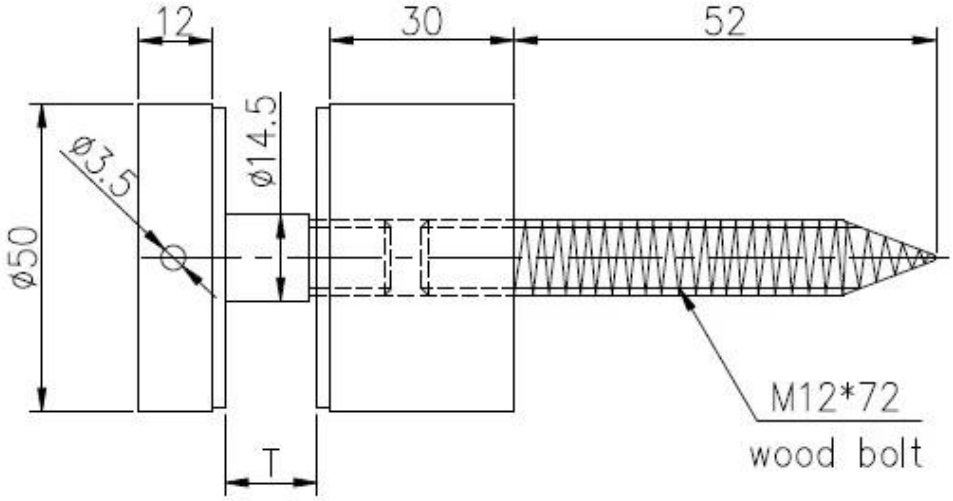

			深圳市朗驰商贸有限公司 SHENZHEN LAUNCH CO.,LTD.				Surface treatment		Propot
			Design	Jacky	Drawing NO:SF-50		Material		1:1
			Check				No note of entity size tolerance		
			Craft		Name:Standoff		Linear tolerance	X.	±0.1
Quantity	Total	Page	Audit			Revision		X.X	±0.1
								X.XX	±0.1
			Approve			V001	Angle tolerance	X.	±1°
								X.X	±0.5°

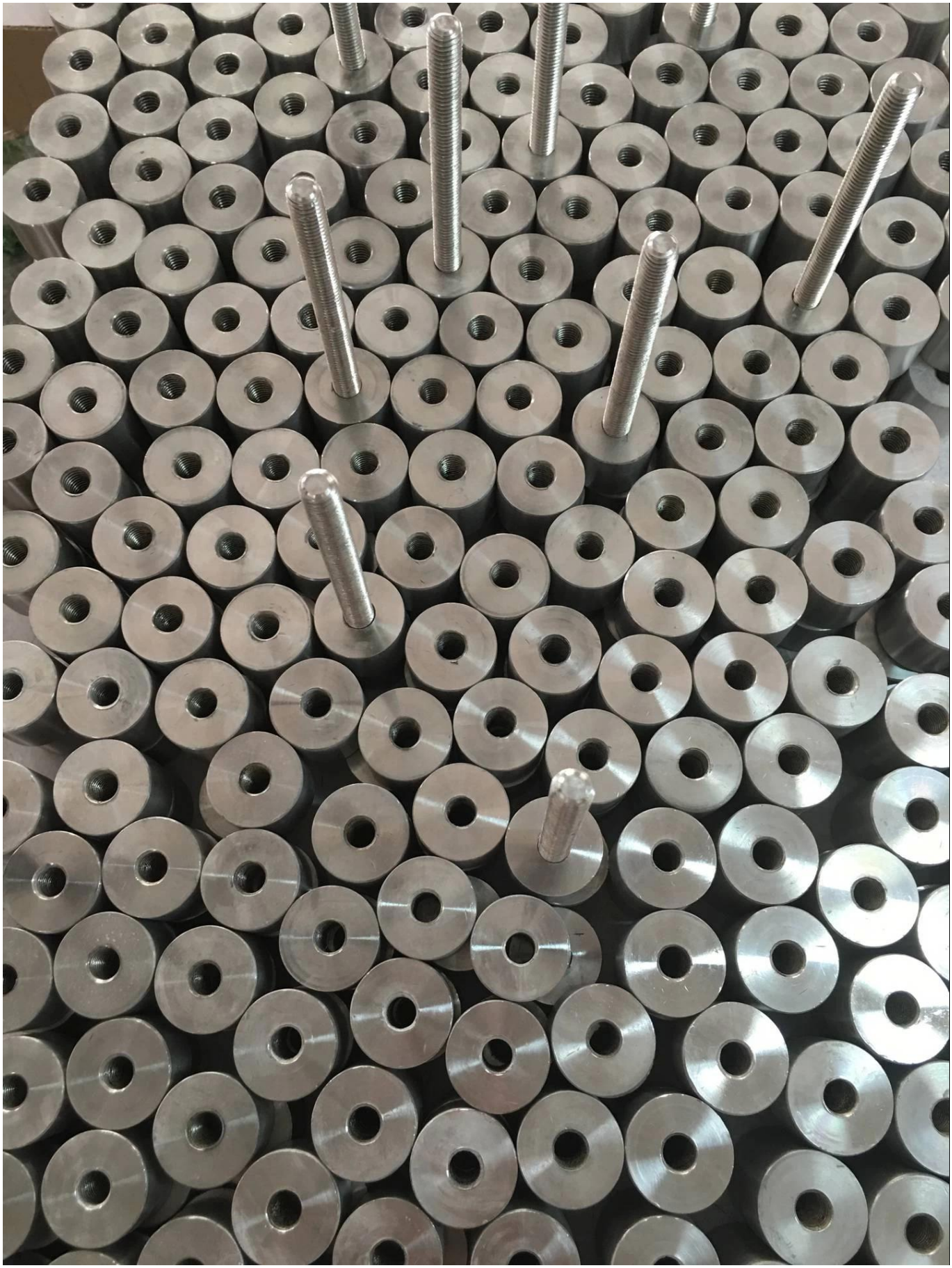

Fotos del proyecto:

Barandilla de cristal con sistema de balaustrada de acero inoxidable

Separador de vidrio de acero inoxidable para barandilla de vidrio sin marco

Separador de acero inoxidable, soporte para diseño de barandilla de escalera.

Información de la compañía:

Shenzhen Launch Co., Ltd was established in 2004, located at Nanshan District, Shenzhen, and one hour by car from Hongkong International Airport. Our main product is high-grade building materials includes stainless steel balustrade post, staircase handrail, balcony guardrail, swimming pool fence and other high-grade building materials. All the products are designed strictly according to the high-end market requirements. We have our own factory in Tangxia Town, Dongguan, has a variety of precision equipment more than 50 sets: CNC lathe, milling machine, punching machine, pipe cutter, argon welder, drilling machine, polisher, etc. which can provide customers with complete product processing services. With the German SPECTRO Spectrometer, we insist on testing every batch of materials to ensure that the material is highly qualified. We also have hardness gauge, secondary element and other test equipment to ensure the products meets customers' requirements.

ABOUT US

OUR ADVANTAGE

Please do not hesitate to contact us if you have any requirement regarding our production lines, you can expect a timely reply with professional solutions!

Own factory, shortest lead time.

Can help customers design product drawings based on customer ideas and design engineering installation drawing according to the customer site sketch.

Sample order, trial order acceptable.

Provide material test report to ensure that the material is qualified.

13 years of industry experience, we can help customers recommend the best solution to help customers save cost.

OUR FACTORY

More than 13 years experience in hardware industry design and processing, we can provide customized services from design to the sample and small batch trial production.

OUR CERTIFICATE

With premium quality, competitive price and superior service, we won a lot of customers' favor.
Our products are popular in North America, European and Australia.

PRODUCTION PROCESS

Casting

CNC lathe

CNC Milling

Stamping

Drilling & Tapping

Polishing

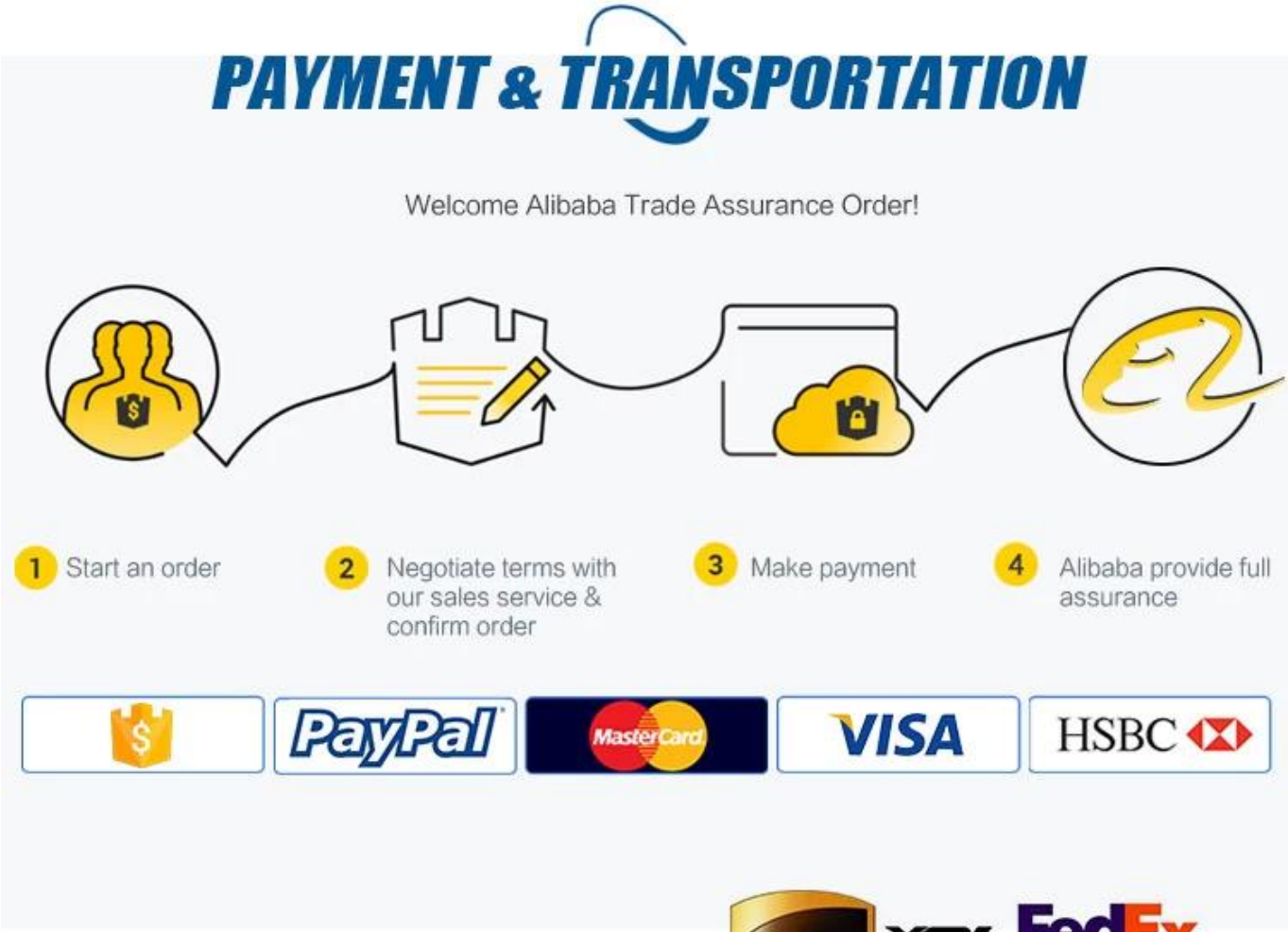

¡Contáctenos ahora para más información!

Correo electrónico: sales03@launch-china.cn
Mob: +8615907334556