Shenzhen Launch se estableció en 2004 y hemos sido proveedores de oro de SGS durante 16 años. Somos fabricantes y proveedores confiables.

COMPANY INTRODUCTION

Verification Type: Supplier Assessment Onsite Check

Country / Region: Guangdong, China ✓

Year Established: 2004 ✓

Main Products: CNC Machining Parts,Stamping Pa... ✓

Main Markets: North America, Oceania, Mid East,... ✓

Total Annual Revenue: confidential ✓

Total Employees: 11 - 50 People ✓

Alibaba.com Gold Plus Supplier

Main Product Lines Verification Report

Presented to

Shenzhen Launch Co., Ltd.

深圳市朗驰商贸有限公司

Company Address	B5003, Building 3, Yilida Building, No. 1092 Nanshan Avenue, Dengliang Community, Nanshan Street, Nanshan District, Shenzhen City, Guangdong Province, China
Consigner of Assessment:	Alibaba
Gold Supplier Member ID:	launch168
Gold Supplier Company Name:	Shenzhen Launch Co., Ltd.
Contact Person:	Mr. Binfeng Gao
Phone Number:	0086-13802569770
Fax Number:	0086-755-86372611
Email:	gbf999@china.com
Website Address (URL):	http://launch-china.en.alibaba.com

Service Provided by SGS
Report No.: 19536352_P+T

Alibaba.com Global trade starts here. SGS

Alibaba.com Gold Plus Supplier

Verified

Assessment Report

Presented to

Cooperation Company of Shenzhen Launch Co., Ltd.

深圳市朗驰商贸有限公司合作工厂

Gold Supplier & Assessed Company Relationship:	☐ Self-owned ☐ Wholly Owned ☐ Shareholder/Partner ☐ Kindred between Owners ☒ Cooperation Partner
Company Address	Confidential
City / Country:	Huizhou / China
Consigner of Assessment:	Alibaba & Shenzhen Launch Co., Ltd.
Gold Supplier Member ID:	launch168
Gold Supplier Company Name:	Shenzhen Launch Co., Ltd.
Contact Person:	Confidential
Phone Number:	Confidential
Fax Number:	Confidential
Email:	Confidential
Website Address (URL):	http://launch-china.en.alibaba.com

Service Provided by SGS
Report No.: 19552720_P

Alibaba.com Global trade starts here. SGS

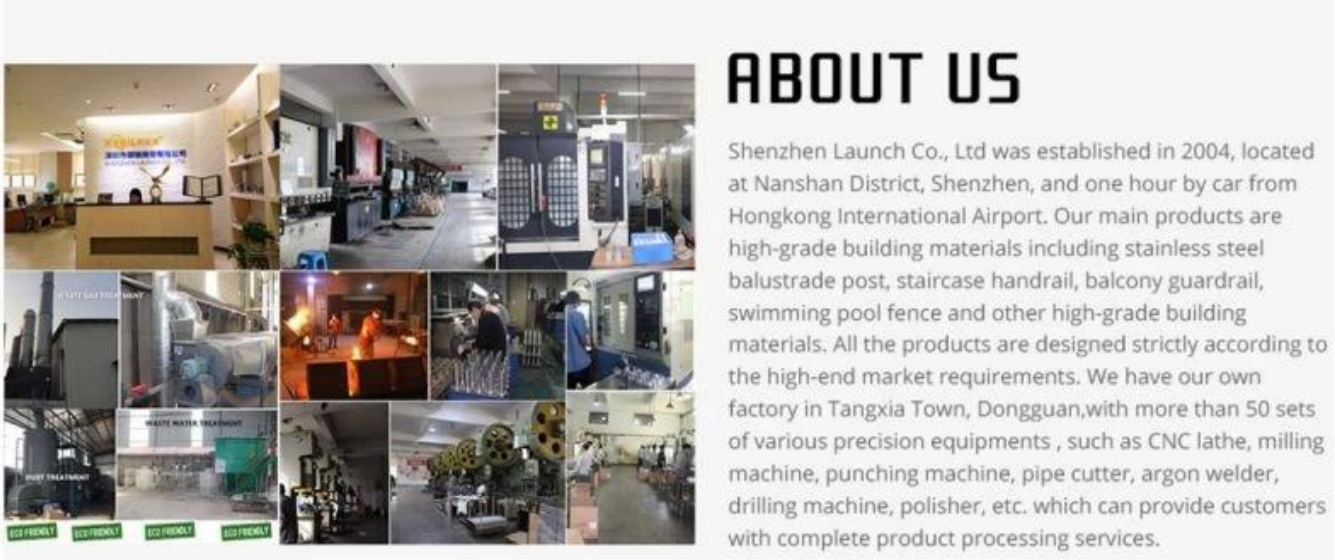

Productomostrar

Nombre del producto	Tubo de ranura cuadrada o redonda
Material	SS304 / SS316
Acabado de superficie	Satinado / Espejo / Otro
Espesor de vidrio	10 mm, 12 mm, etc.
Productocortarlo	5,8 metros / piezas o cortar según los requisitos de los clientes
Solicitud	Sistema de barandilla de vidrio para interior y exterior

Tubo cuadrado ranurado

KEBIL科比奥®

25×21MM, GROOVE 14×14MM

Surface treatment: satin brushed / mirror polished

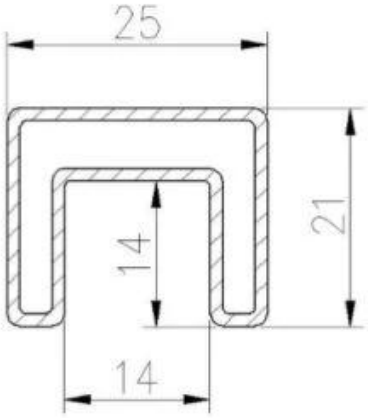

25*21 tube

Model: SQ2521

21*25mm slot handrail

5.8 m per length

180 degree joiner

90 degree joiner

Vertical adjustable joiner

Horizontal l adjustable joiner

Wall to handrail joiner

End cap

Tubo redondo ranurado

KEBIL科比奥®

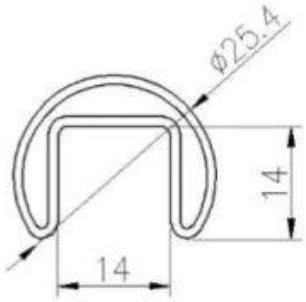

DIAMETER 25.4MM, GROOVE 14×14MM

Model: RD2525

Surface treatment: satin brushed / mirror polished

Diferentes estructuras y tamaños.

STAINLESS STEEL SLOT TUBE

	DIAMETER (MM)	SLOT WIDTH (MM)	SLOT DEPTH (MM)
ROUND SINGLE SLOT	38	15	15
	42.4	15	15
	42.4	24	24
	45	20	20
	50.8	15	15
	50.8	20	20
	50.8	25	25
	50.8	30	30
	50.8	15	20
	60.3	20	20
	60.3	25	25
	63.5	15	15
	63.5	20	20
	63.5	25	25
	63.5	30	30
	76	15	15
	76	20	20
	76	25	25
	76	30	30
ROUND DOUBLE SLOT	50.8	15	15
	50.8	25*16	16*12
	63	20	20
	63	25	25

	DIAMETER (MM)	SLOT WIDTH (MM)	SLOT DEPTH (MM)
ROUND 90 DEGREE SLOT	50.8	15	15
SQUARE SINGLE SLOT	30x30	15	15
	38x38	15	15
	40x40	15	15
	40x40	20	20
	40x40	24	24
	50x50	15	15
	50x50	20	20
	50x50	24	24
SQUARE DOUBLE SLOT	40x40	15	15
	50x50	15	15
SQUARE 90 DEGREE SLOT	50x50	15	15

Barandillasistemacomoabajo

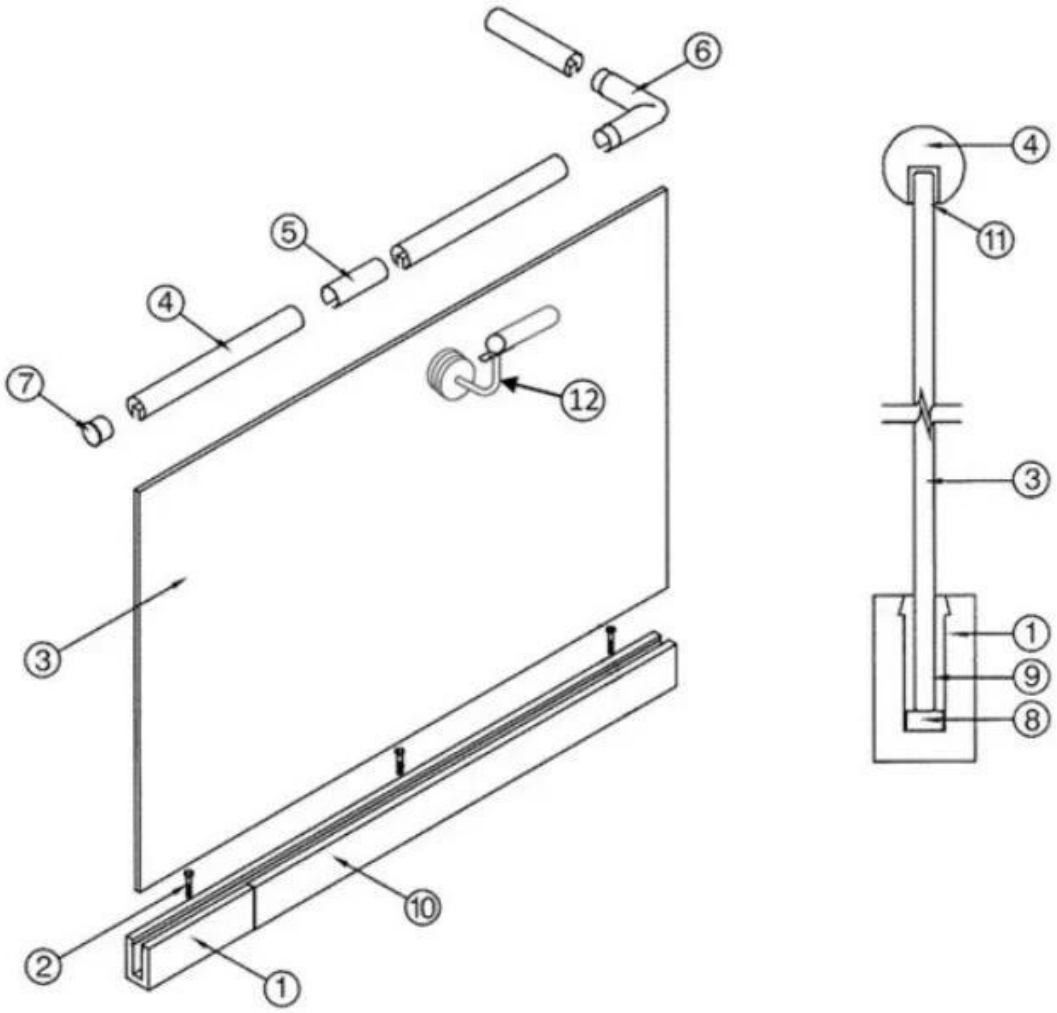

1. Aluminum Railing Base
2. Stainless Cap Screw
3. ½" Tempered Float Glass
4. Top Rail
5. Splice
6. Corner fitting (Horizontal Shown Vertical Also Available)
7. End Cap
8. Setting Block
9. Expansive Cement
10. Cladding
11. Protective Insert
12. Handrail Brackets and Fittings Also Available

Masaproducción

Foto de embalaje

Plastic inner packaging → Cardboard sleeve → Metal frame

Proyectoshow

Si tiene alguna pregunta para ellos, no dude en ponerse en contacto conmigo.
Frank Fang
Correo electrónico: sales02@launch-china.cn
Teléfono / WhatsApp / Wechat: +86159 0626 1741