Shenzhen Launch se estableció en 2004 y hemos sido proveedores de oro de SGS durante 16 años. Somos fabricantes y proveedores confiables.

COMPANY INTRODUCTION

Verification Type: Supplier Assessment Onsite Check

Country / Region: Guangdong, China ✓

Year Established: 2004 ✓

Main Products: CNC Machining Parts,Stamping Pa... ✓

Main Markets: North America, Oceania, Mid East,... ✓

Total Annual Revenue: confidential ✓

Total Employees: 11 - 50 People ✓

Alibaba.com Gold Plus Supplier

Main Product Lines Verification Report

Presented to

Shenzhen Launch Co., Ltd.

深圳市朗驰商贸有限公司

Company Address	B5003, Building 3, Yilida Building, No. 1092 Nanshan Avenue, Dengliang Community, Nanshan Street, Nanshan District, Shenzhen City, Guangdong Province, China
Consigner of Assessment:	Alibaba
Gold Supplier Member ID:	launch168
Gold Supplier Company Name:	Shenzhen Launch Co., Ltd.
Contact Person:	Mr. Binfeng Gao
Phone Number:	0086-13802569770
Fax Number:	0086-755-86372611
Email:	gbf999@china.com
Website Address (URL):	http://launch-china.en.alibaba.com

Service Provided by SGS
Report No.: 19536352_P+T

Alibaba.com Global trade starts here. SGS

Alibaba.com Gold Plus Supplier

Verified

Assessment Report

Presented to

Cooperation Company of Shenzhen Launch Co., Ltd.

深圳市朗驰商贸有限公司合作工厂

Gold Supplier & Assessed Company Relationship:	☐ Self-owned ☐ Wholly Owned ☐ Shareholder/Partner ☐ Kindred between Owners ☒ Cooperation Partner
Company Address	Confidential
City / Country:	Huizhou / China
Consigner of Assessment:	Alibaba & Shenzhen Launch Co., Ltd.
Gold Supplier Member ID:	launch168
Gold Supplier Company Name:	Shenzhen Launch Co., Ltd.
Contact Person:	Confidential
Phone Number:	Confidential
Fax Number:	Confidential
Email:	Confidential
Website Address (URL):	http://launch-china.en.alibaba.com

Service Provided by SGS
Report No.: 19552720_P

Alibaba.com Global trade starts here. SGS

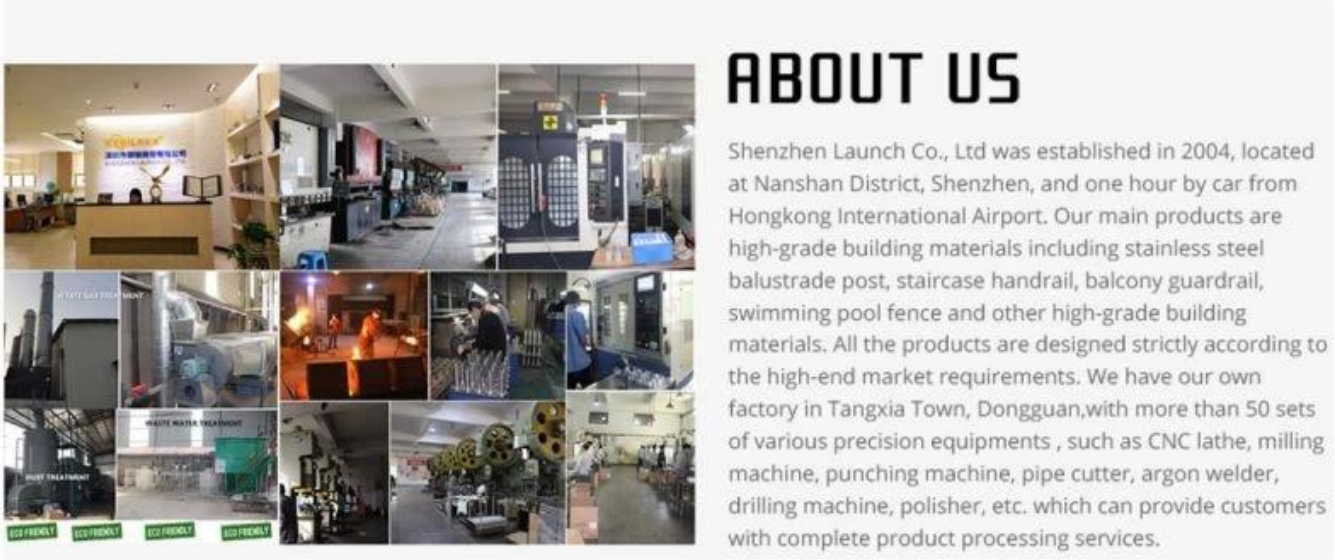

Especificaciones del producto

Separador de vidrio de montaje lateral de acero inoxidable

Nombre del producto	
N º de Modelo.	SF-50G
Material	304SS / 316SS
Acabado de superficie	Satinado / Espejo / Otros
Tamaño corporal	Diámetro 50 * 40 mm
Tamaño de la tapa	50 * 12 mm de diámetro

Presentacion de producto

TécnicoDibujo

Specs. For SS 2-ble Buttons Attachment System 50mm (w) by 8" (h)

- stainless steel 316 , polished
- Dimensions as per drawing

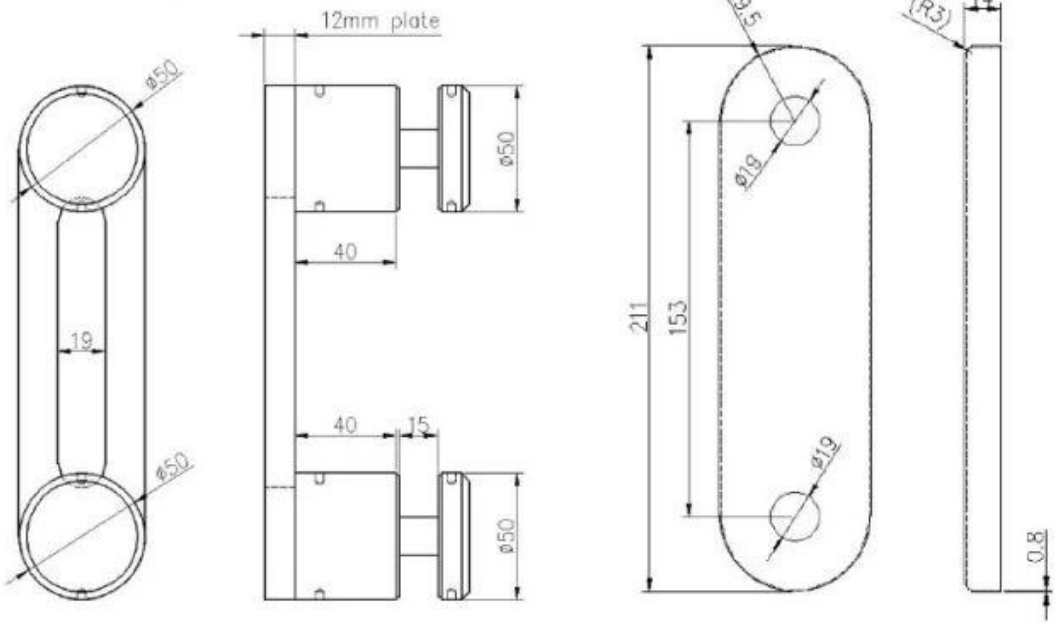

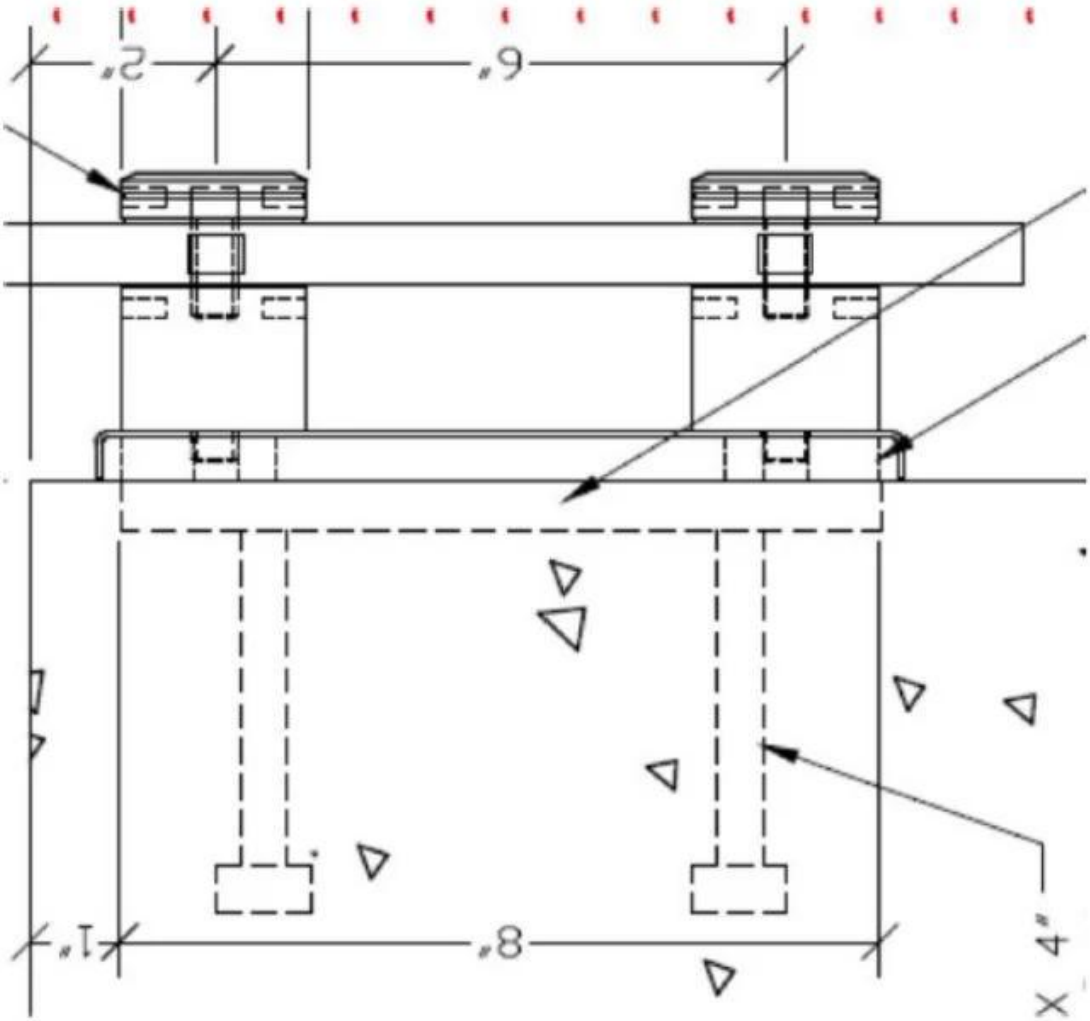

Otras especificaciones de separadores

STAND OFF

Part No.	Material	Finish	Body	Bolt size
▪ SF-30 ▪ SF-40 ▪ SF-50 ▪ SF-50A	▪ AISI 304 ▪ AISI 316	▪ Satin ▪ Mirror	▪ 30x10; 30x25mm ▪ 40x10; 40x30mm ▪ 50x12; 50x30mm ▪ 50x12; 50x50mm ▪ silicon rubber gasket included	▪ M10x120 bolt ▪ M10x72 wood screw ▪ M8x100 bolt ▪ M8 x72 wood screw

Part No.	Material	Finish	Body	Bolt size
▪ SF-38Z	▪ AISI 304 ▪ AISI 316	▪ Satin ▪ Mirror	▪ hollow type ▪ 38x7.5;38x38mm ▪ silicon rubber gasket included	▪ M8x70 hexagonal screw

Part No.	Material	Finish	Body	Mounting plate size
▪ SF-50T	▪ AISI 304 ▪ AISI 316	▪ Satin ▪ Mirror	▪ 50x10;50x30mm ▪ silicon rubber gasket included	▪ 200x100x10mm

SF-50T

SF-50A

SF-50

SF-38

SF-38Z

SF-30

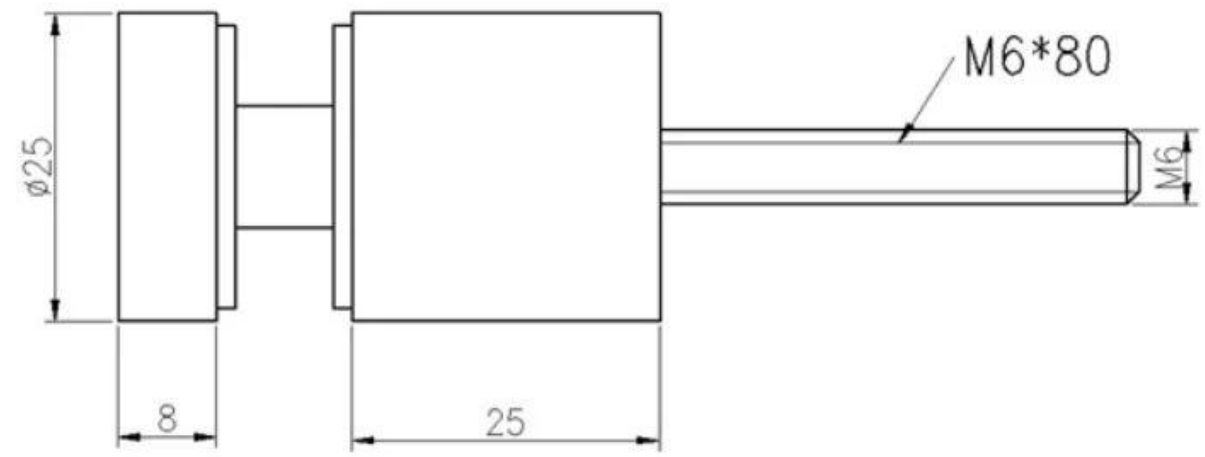

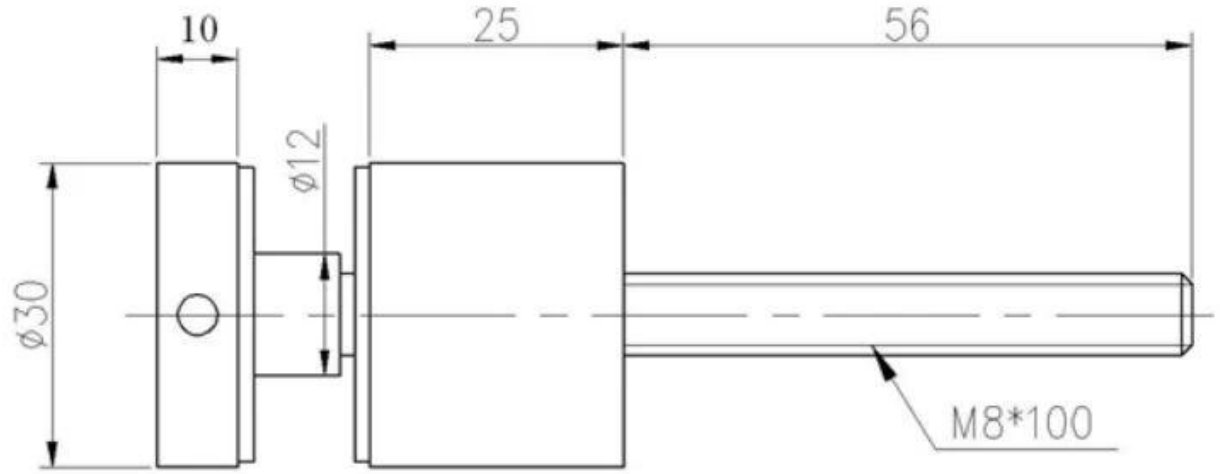

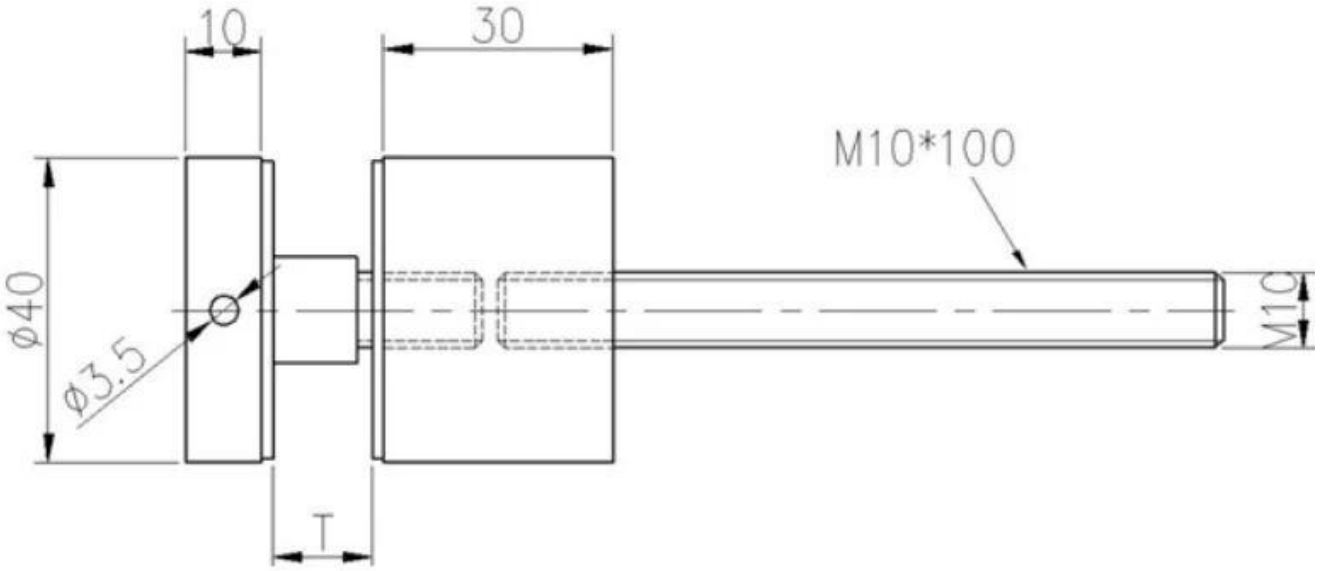

MasaProducción

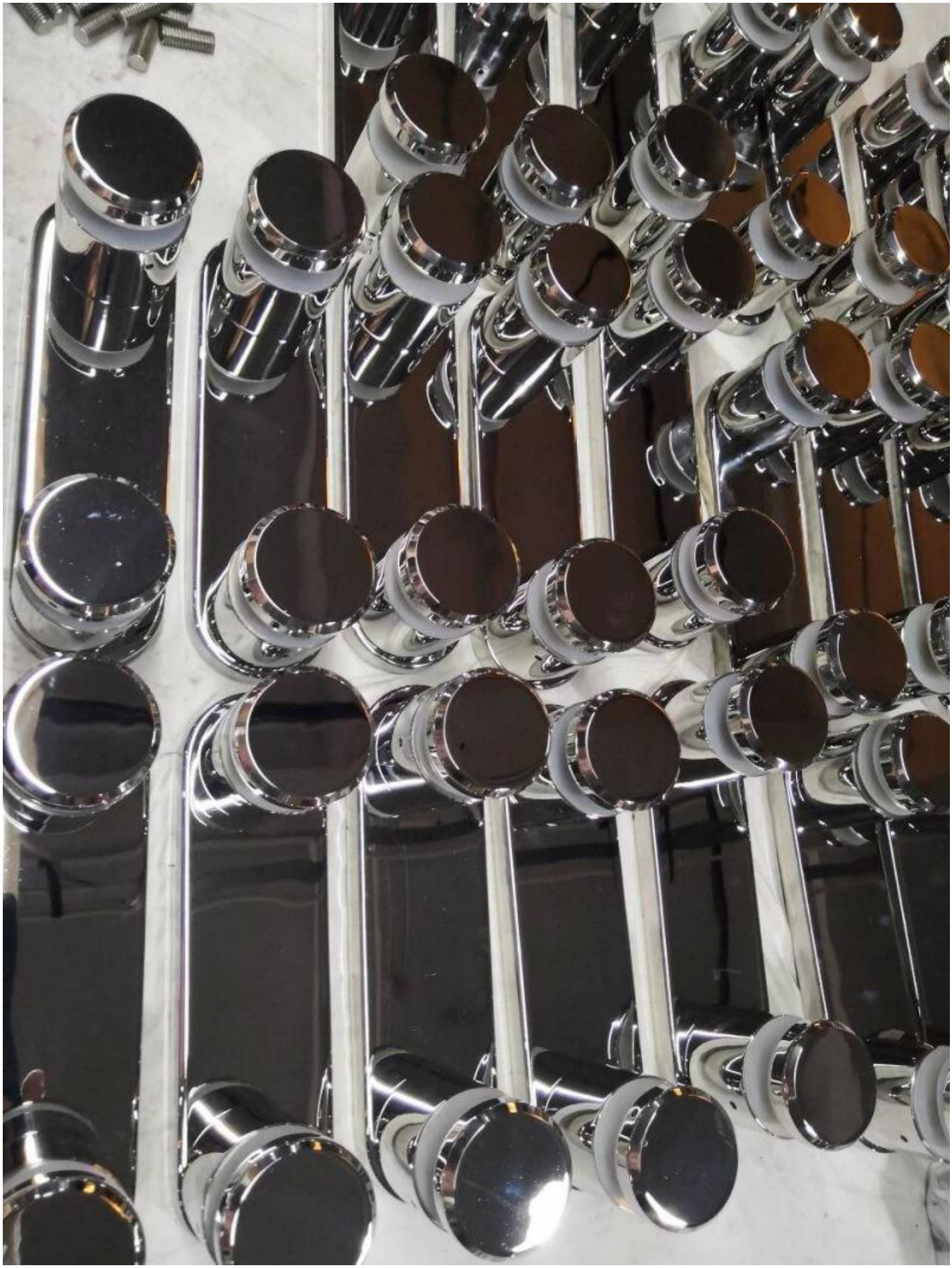

Imágenes de embalaje

Imágenes de la aplicación

Gaudeix de tota la moda
Superdry
Propera Obertura

Si tiene alguna necesidad, no dude en contactarnos.

Frank Fang

Correo electrónico: sales02@launch-china.cn

Teléfono / WhatsApp / Wechat: +8615906261741