El lanzamiento de Shenzhen puede producir una bisagra de vidrio cargada por resorte para la colección de vidrio de piscina, un par de bisagra de vidrio puede transportar una puerta de cristal de 30 kg, el grosor de la pared de la puerta prefiere a 8-12 mm. Aquí se presentan por debajo de varios tipos para su revisión. Bienvenido a tus consultas.

Presentacion de producto

Spring loaded hinges

Stainless steel spring loaded hinges

-Made of SS 316

- For use of 8-12.76mm glass

Maximum door leaf weight : 30 kg /pair

Maximum door leaf width : 900mm

Spring can be adjusted for closing speed control .

Part # G-G

Part # G-R

Part # G-W

SHENZHEN LAUNCH CO., LTD 1

Tipo de vidrio para vidrio

N º de Modelo.:G-g

KEBIL科比奥®

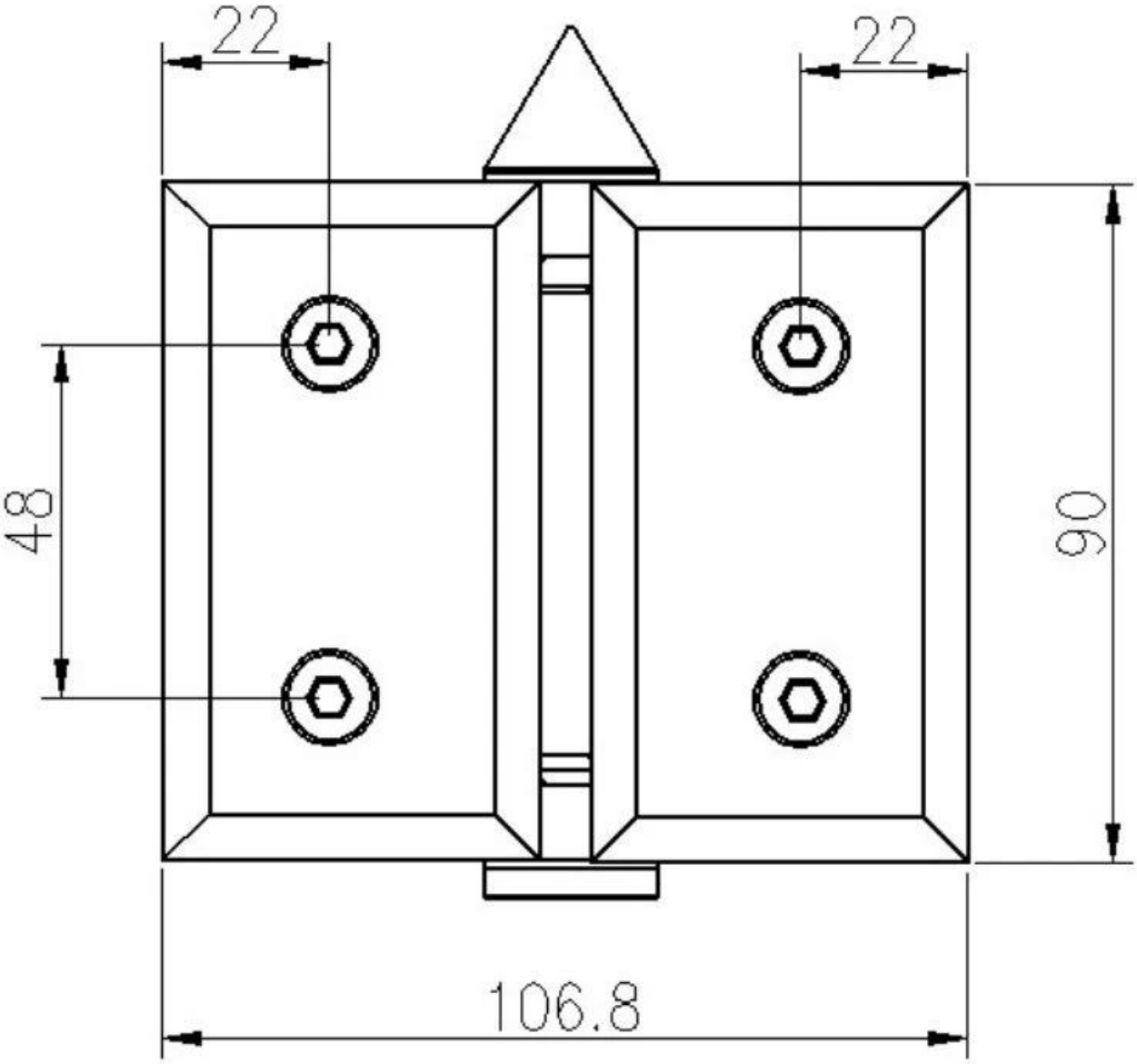
22
22
48
90
106.8

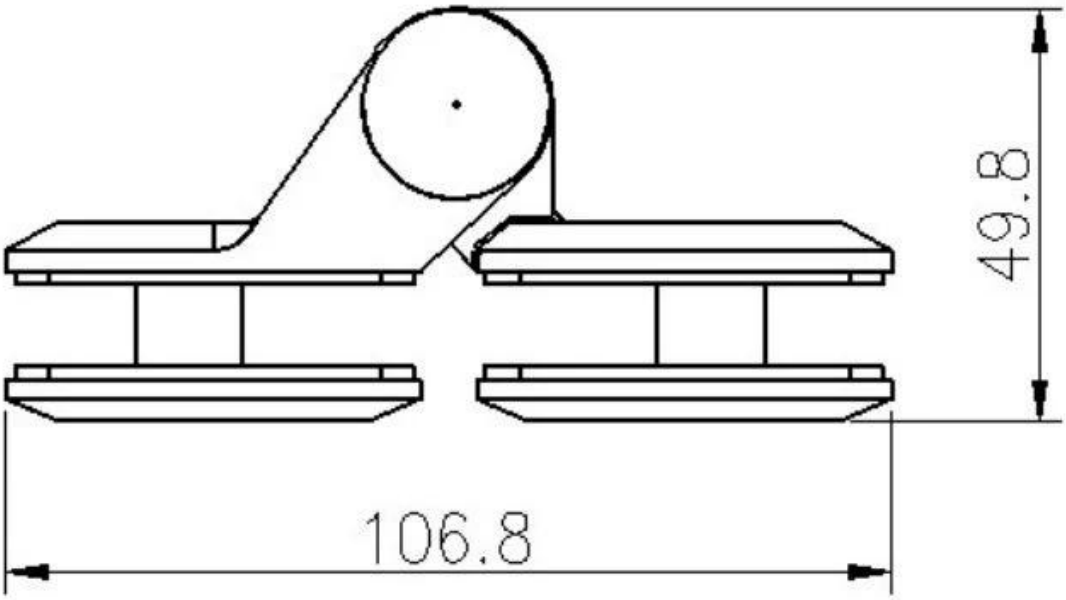
49.8
106.8

KEBIL科比奥
www.launch-china.cn

Instructions for adjusting tension on Glass to Glass hinge

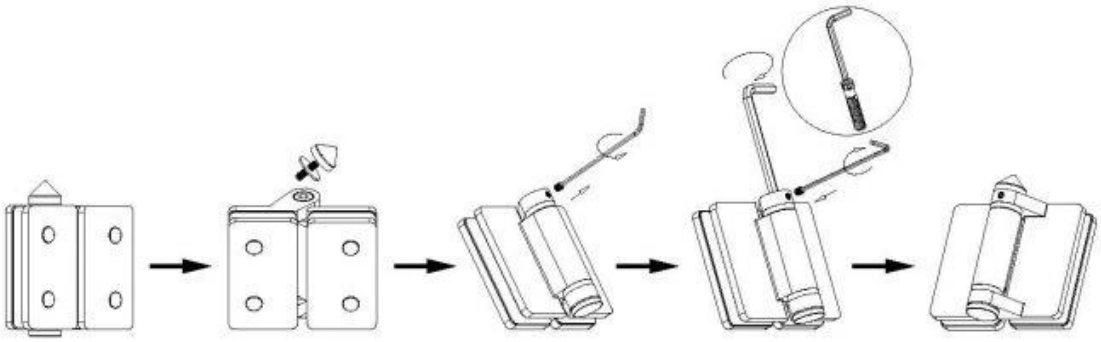

STEP 1
Remove cone and grub screw by turning anticlockwise to reveal tension pin.

STEP 2
Remove grub screw from side of hinge with Allen Key supplied.

STEP 3
Turn the tension pin clockwise to the next hole in tension pin,then tighten the grub screw, repeat this process a Maximum of three times or 360°, Do not over tension.

Tipo de vidrio a pared

N º de Modelo.:G-w

KEBIL科比奥®

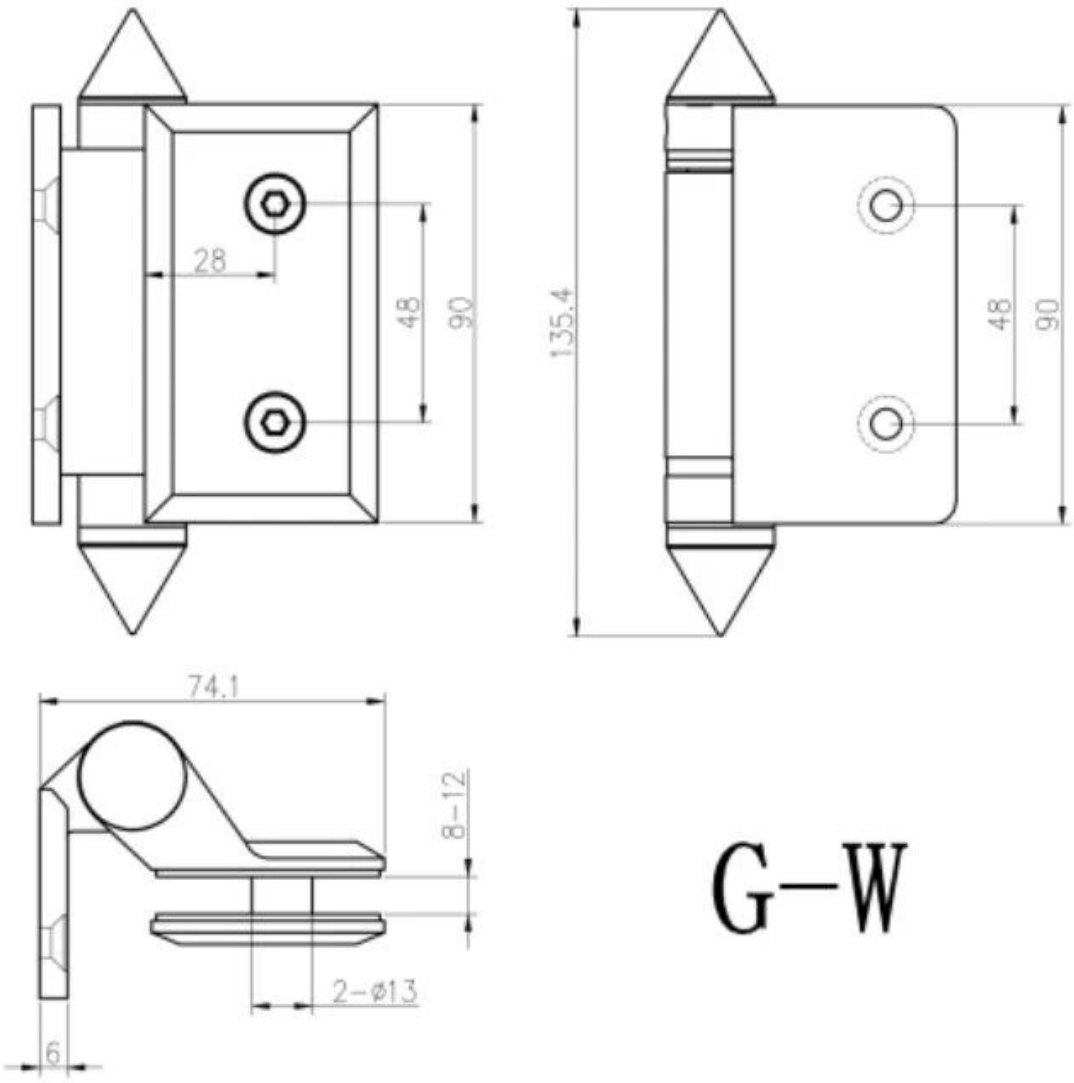

G-W

KEBIL科比奥
www.launch-china.cn

Instructions for adjusting tension on Glass to Wall hinge

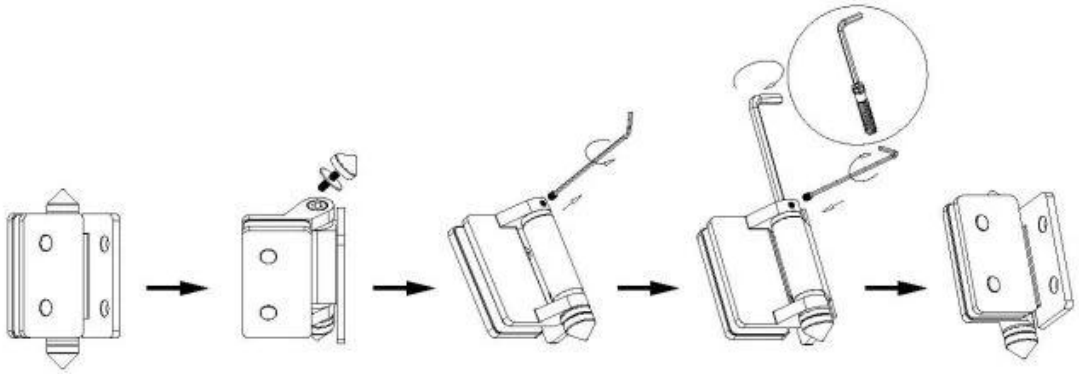

STEP 1
Remove cone and grub screw by turning anticlockwise to reveal tension pin.

STEP 2
Remove grub screw from side of hinge with Allen Key supplied.

STEP 3
Turn the tension pin clockwise to the next hole in tension pin,then tighten the grub screw, repeat this process a Maximum of three times or 360°, Do not over tension.

Tipo de vidrio a redondo

N º de Modelo.:GRAMO

KEBIL科比奥®

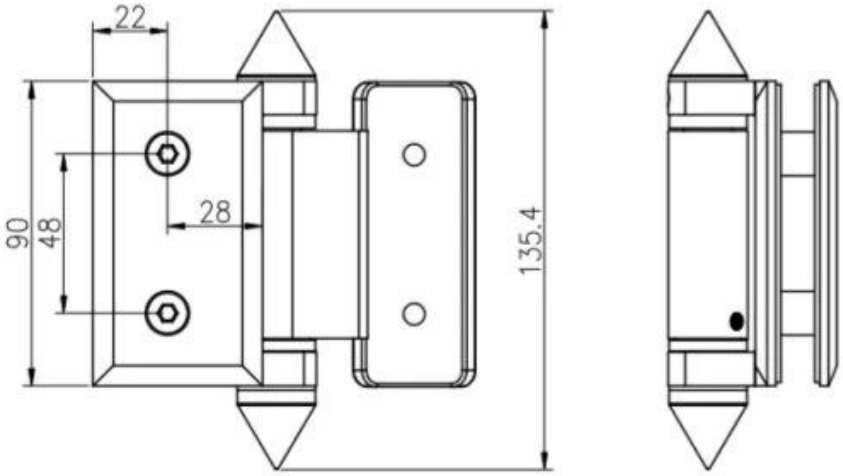

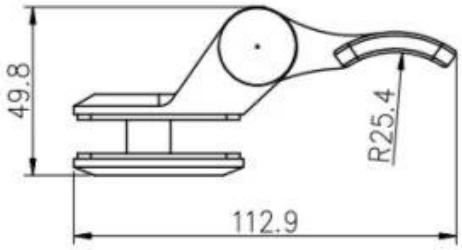

深圳市朗驰商贸有限公司 SHENZHEN LAUNCH CO.,LTD.				表面处理		比 例
设 计	Jacky	图号:G-R		材 料		1:1.5
校 对				未注实体尺寸公差		
工 艺				线性公差	X.	±0.1
审 核			版 次		X.X	±0.1
批 准			V001		X.XX	±0.1
				角度公差	X.	±1°
					X.X	±0.5°

KEBIL科比奥
www.launch-china.cn

Instructions for adjusting tension on Glass to Round post hinge

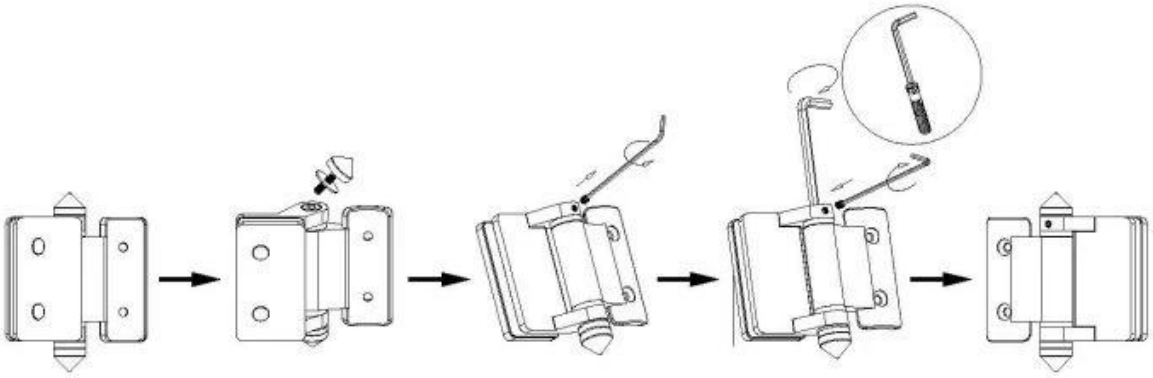

STEP 1
Remove cone and grub screw by turning anticlockwise to reveal tension pin.

STEP 2
Remove grub screw from side of hinge with Allen Key supplied.

STEP 3
Turn the tension pin clockwise to the next hole in tension pin,then tighten the grub screw, repeat this process a Maximum of three times or 360°, Do not over tension.

Producción en masa

EmbalajeRepresentación

Papocología de la aplicación

KEBIL科比奥®
SHENZHEN LAUNCH CO.LTD
LAUNCH INTERNATIONAL LIMITED

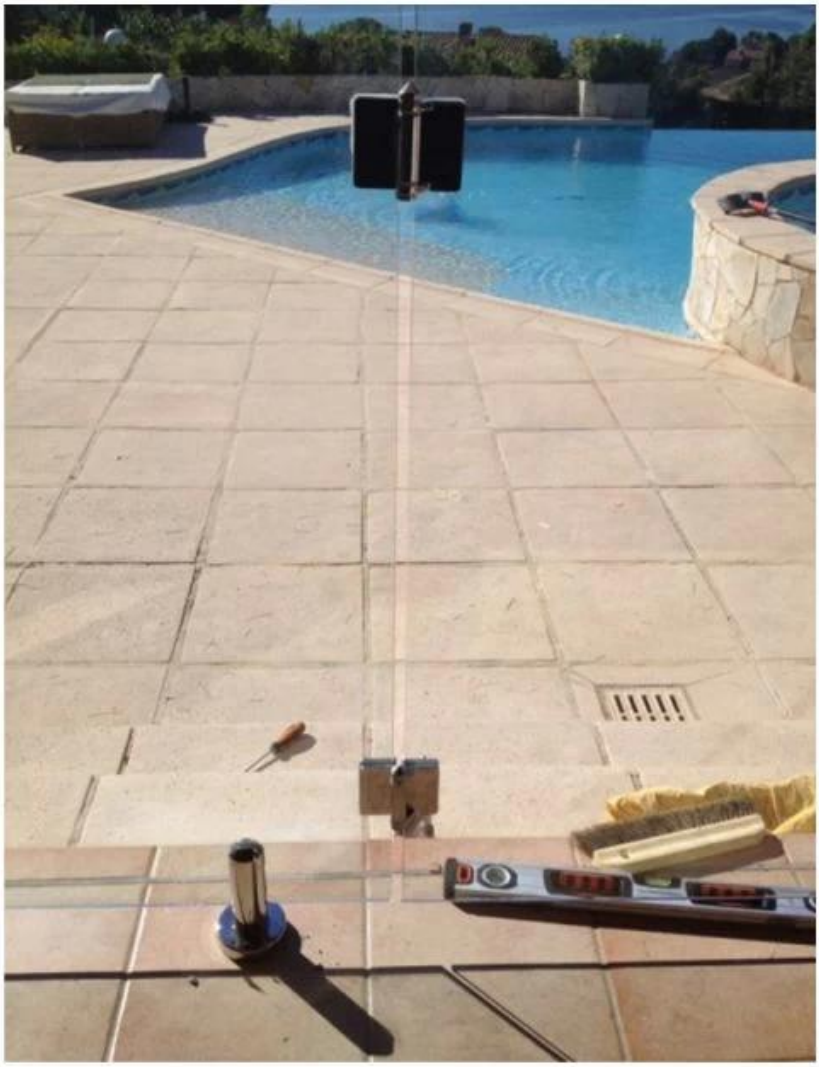

Otrorelacionadoproductos

Spring loaded hinges

Stainless steel spring loaded hinges

-Made of SS 316

- For use of 8-10mm glass

Maximum door leaf weight : 20 kg /pair

Maximum door leaf width : 900mm

Spring can be adjusted for closing speed control .

Part # G-G2

Part # G-R2

Part # G-W2

G-G 1

G-R 1

G-W 1

Si tiene algún interés, no dude en ponerse en contacto conmigo.

Frank Fang

Teléfono / WeChat / WhatsApp: +8615906261741

Correo electrónico: sales02@launch-china.cn