Lasiasennusteline, lasin kiinnityspultit, lasiseinästandoff
Tekniset tiedot:

tuotteen nimi	Lasiasennusteline, lasin kiinnityspultit, lasiseinästandoff
materiaali	Ruostumaton teräs 304/316
Muu nimi	lasi pysähtynyt, standoff-lasikisko
Suorittaa loppuun	Peili kiillotettu, tai satiinista prushed
Lasi erottelukoko	50x12mm korkki, 50x30mm runko, M12 * 120mm pultti, piikumi tiiviste mukana
Lasipaksuus	12-19 mm, tai asiakkaiden vaatimusten mukaan
Porakruunu	Halkaisija 14 mm tarvitaan lasissa
Nettopaino	750g / kpl
asennus	seinäasennus / sivusuuntaus / kaistaleasennus
MOQ	10 palaa
Näyte	Käytettävissä
OEM & ODM-palvelu	hyväksyttävä
hakemus	Sisä- ja ulkotilojen portaat, parvekehylsy, kannen kehyksetön lasikisko, Juliet parvekesuunnittelu, kelluva portaikko
Tehtaan tarkastus	Käytettävissä

Dia 50mm Lasi Standoff / Button in **Satin päättyy**:

Dia 50mm Lasi Standoff / Button in **Mirror Finish**:

Puuruuvilla kiinnitettäessä puupohjaan:

Tekninen piirustus:

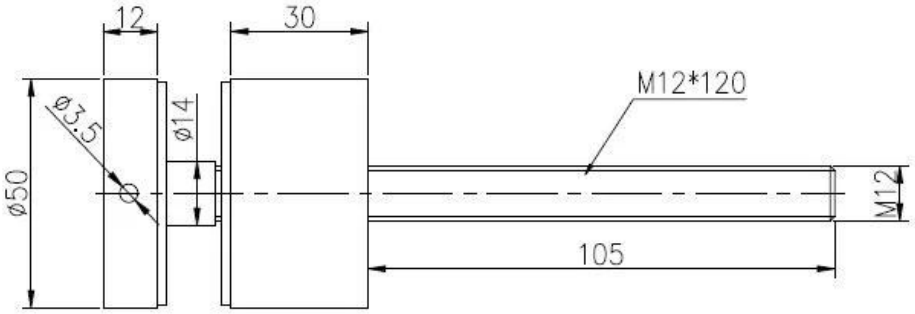

Salesman		Project name	

深圳市朝驰商贸有限公司 SHENZHEN LAUNCH CO.,LTD.			
Design	Jacky	Drawing NO:	
Check			
Craft		Name:Standoff	
Audit			Revision
Approve			V001

Quantity	Total	Page

Surface treatment		Propotion
Material	SS 316	1:1
No note of outity size tolerance		
Linear tolerance	X.	±0.1
	X.X	±0.1
	X.XX	±0.1
Angle tolerance	X.	±1°
	X.X	±0.5°

A4

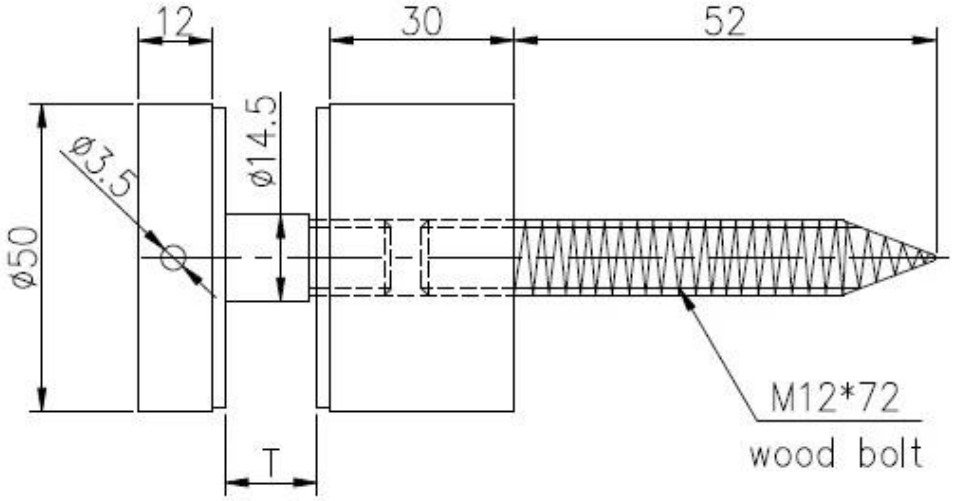

			深圳市朗驰商贸有限公司 SHENZHEN LAUNCH CO.,LTD.				Surface treatment		Propot
			Design	Jacky	Drawing NO:SF-50		Material		1:1
			Check				No note of entity size tolerance		
			Craft		Name:Standoff		Linear tolerance	X.	±0.1
Quantity	Total	Page	Audit			Revision		X.X	±0.1
								X.XX	±0.1
			Approve			V001	Angle tolerance	X.	±1°
								X.X	±0.5°

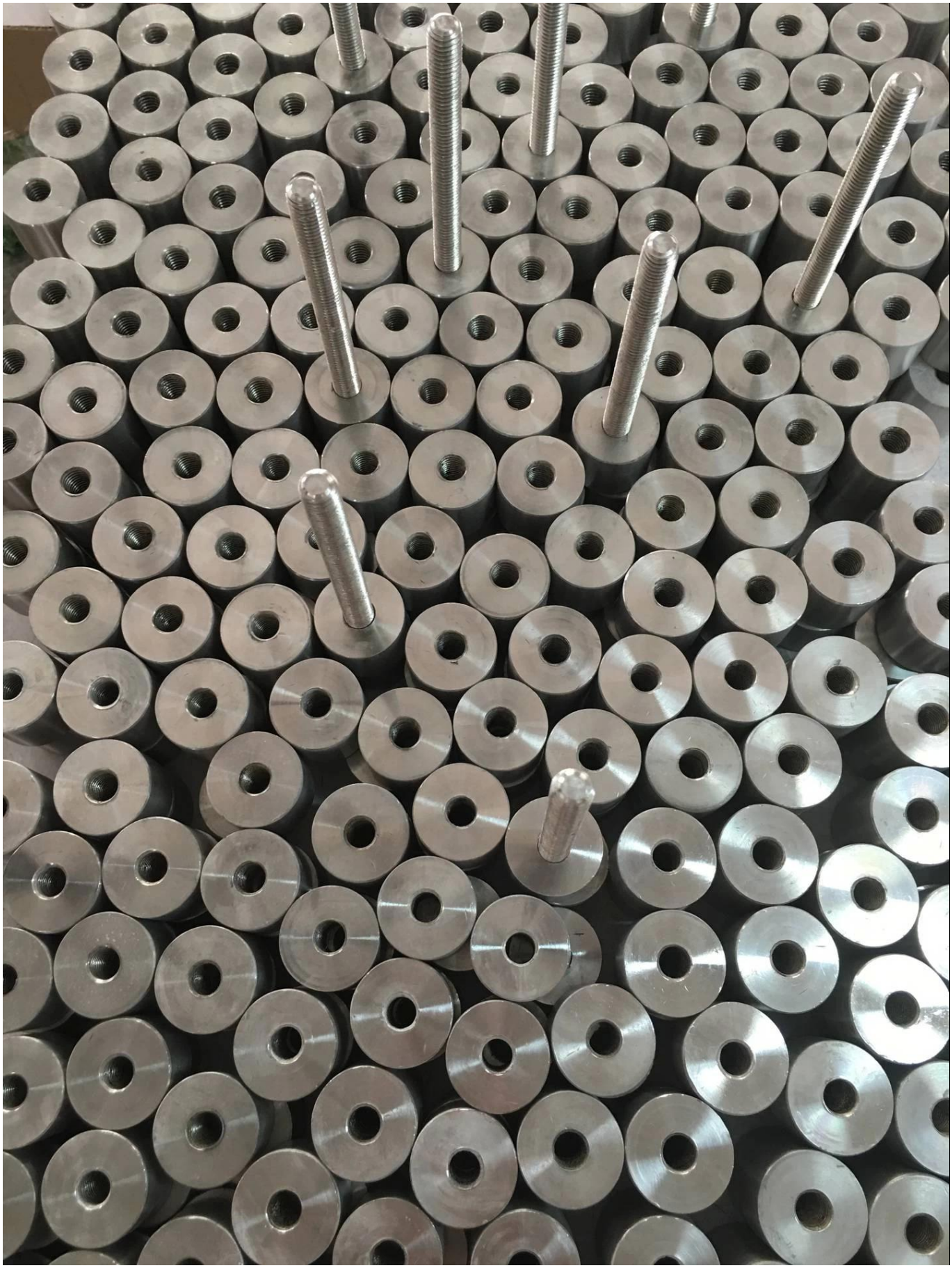

Hankkeen valokuvat:

Lasipainikehylsyjärjestelmä Ruostumaton teräs kaide

Ruostumattomasta teräksestä valmistettu lasi pysähtyy kehykselliselle lasikuorelle

ruostumattomasta teräksestä pysähtynyt, kannake portaikko kaide suunnittelu

Yritystiedot:

Shenzhen Launch Co., Ltd was established in 2004, located at Nanshan District, Shenzhen, and one hour by car from Hongkong International Airport. Our main product is high-grade building materials includes stainless steel balustrade post, staircase handrail, balcony guardrail, swimming pool fence and other high-grade building materials. All the products are designed strictly according to the high-end market requirements. We have our own factory in Tangxia Town, Dongguan, has a variety of precision equipment more than 50 sets: CNC lathe, milling machine, punching machine, pipe cutter, argon welder, drilling machine, polisher, etc. which can provide customers with complete product processing services. With the German SPECTRO Spectrometer, we insist on testing every batch of materials to ensure that the material is highly qualified. We also have hardness gauge, secondary element and other test equipment to ensure the products meets customers' requirements.

ABOUT US

OUR ADVANTAGE

Please do not hesitate to contact us if you have any requirement regarding our production lines, you can expect a timely reply with professional solutions!

Own factory, shortest lead time.

Can help customers design product drawings based on customer ideas and design engineering installation drawing according to the customer site sketch.

Sample order, trial order acceptable.

Provide material test report to ensure that the material is qualified.

13 years of industry experience, we can help customers recommend the best solution to help customers save cost.

OUR FACTORY

More than 13 years experience in hardware industry design and processing, we can provide customized services from design to the sample and small batch trial production.

OUR CERTIFICATE

With premium quality, competitive price and superior service, we won a lot of customers' favor.
Our products are popular in North America, European and Australia.

PRODUCTION PROCESS

Casting

CNC lathe

CNC Milling

Stamping

Drilling & Tapping

Polishing

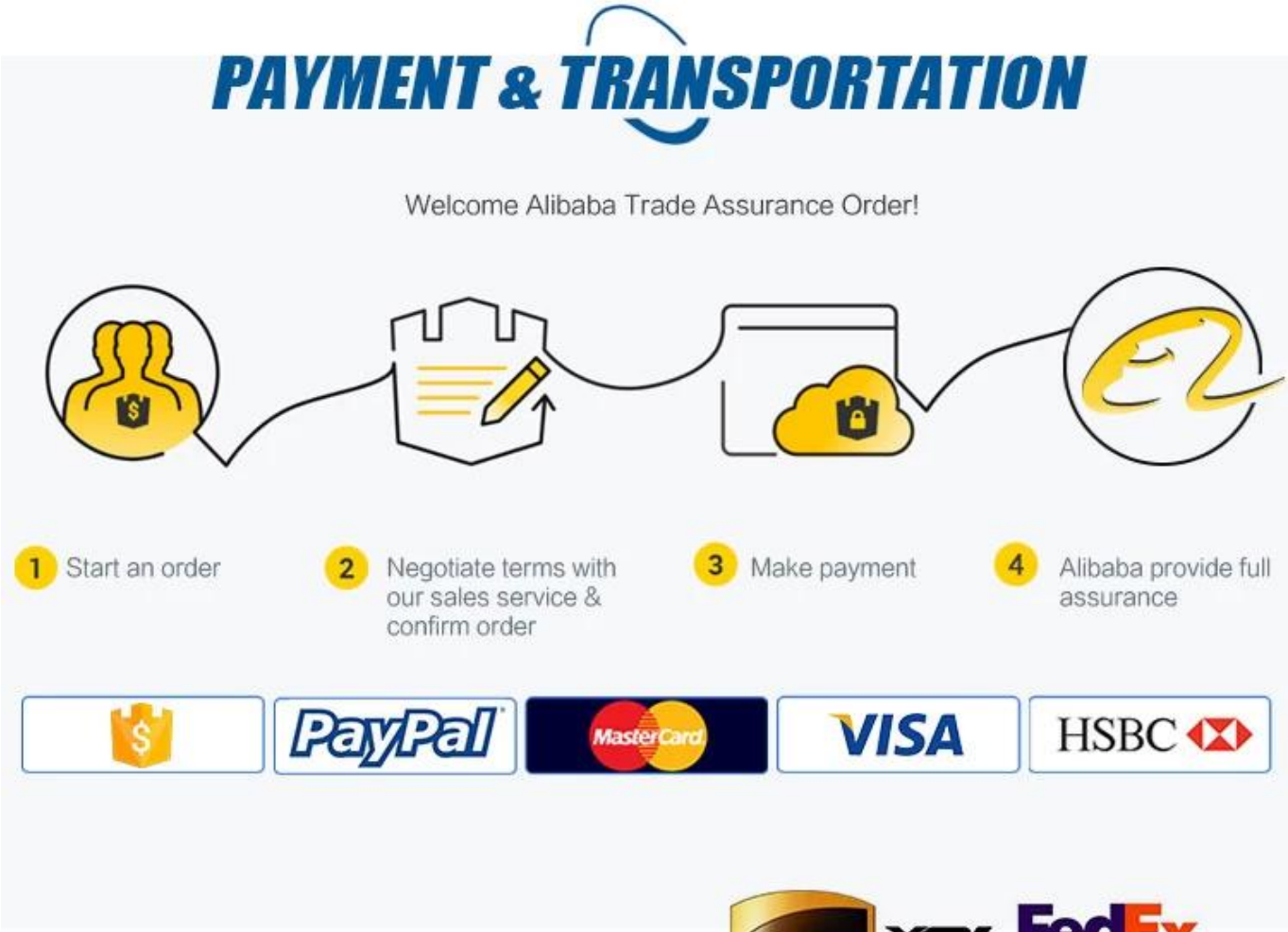

Ota yhteyttä nyt lisätietoja!

Sähköposti: sales03@launch-china.cn
Mob: +8615907334556