**Shenzhen Launch perustettiin vuodesta 2004, ja olemme SGS-kullan toimittaja 16 vuoden ajan. Olemme luotettava valmistaja ja toimittaja.**

## COMPANY INTRODUCTION

Verification Type: Supplier Assessment Onsite Check

**Country / Region:** Guangdong, China ✓

**Year Established:** 2004 ✓

**Main Products:** CNC Machining Parts,Stamping Pa... ✓

**Main Markets:** North America, Oceania, Mid East,... ✓

**Total Annual Revenue:** confidential ✓

**Total Employees:** 11 - 50 People ✓

### Alibaba.com Gold Plus Supplier

#### Main Product Lines Verification Report

*Presented to*

**Shenzhen Launch Co., Ltd.**

深圳市朗驰商贸有限公司

| | |
|---|---|
| Company Address | B5003, Building 3, Yiida Building, No. 1092 Nanshan Avenue, Dengliang Community, Nanshan Street, Nanshan District, Shenzhen City, Guangdong Province, China |
| Consigner of Assessment: | Alibaba |
| Gold Supplier Member ID: | launch168 |
| Gold Supplier Company Name: | Shenzhen Launch Co., Ltd. |
| Contact Person: | Mr. Binfeng Gao |
| Phone Number: | 0086-13802569770 |
| Fax Number: | 0086-755-86372611 |
| Email: | gbf999@china.com |
| Website Address (URL): | http://launch-china.en.alibaba.com |

*Service Provided by SGS*
*Report No.: 19536352_P+T*

Alibaba.com Global trade starts here. SGS

### Alibaba.com Gold Plus Supplier

Verified

#### Assessment Report

*Presented to*

**Cooperation Company of Shenzhen Launch Co., Ltd.**

深圳市朗驰商贸有限公司合作工厂

| | |
|---|---|
| Gold Supplier & Assessed Company Relationship: | ☐ Self-owned ☐ Wholly Owned ☐ Shareholder/Partner ☐ Kindred between Owners ☒ Cooperation Partner |
| Company Address | Confidential |
| City / Country: | Huizhou / China |
| Consigner of Assessment: | Alibaba & Shenzhen Launch Co., Ltd. |
| Gold Supplier Member ID: | launch168 |
| Gold Supplier Company Name: | Shenzhen Launch Co., Ltd. |
| Contact Person: | Confidential |
| Phone Number: | Confidential |
| Fax Number: | Confidential |
| Email: | Confidential |
| Website Address (URL): | http://launch-china.en.alibaba.com |

*Service Provided by SGS*
*Report No.: 19552720_P*

Alibaba.com Global trade starts here. SGS

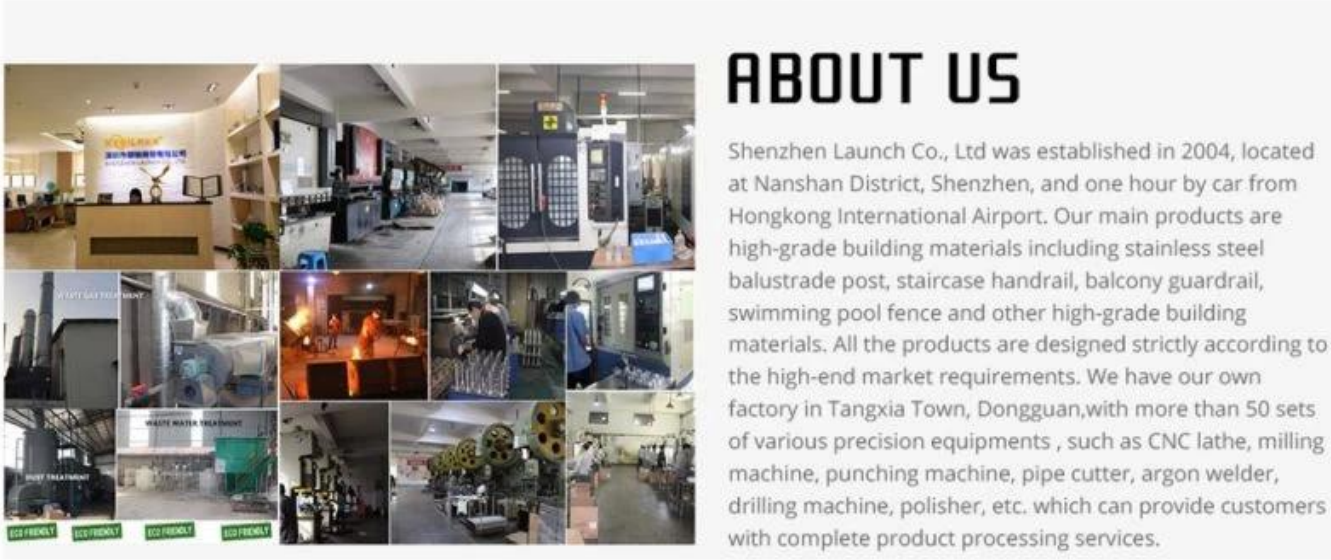


## TuoteNäytä

| | |
|---|---|
| **Tuotteen nimi** | Säädettävä kaapelin kiristin |
| **Malli nro.** | T807A |
| **Materiaali** | SS304 / SS316 |
| **Pinnan viimeistely** | Satiini / peili / muut |
| **Kaapelin halkaisija** | 3mm, 4mm, 5mm |
| **Sovellus** | Sisä- ja ulkokaapelikaitejärjestelmä |

**Mitat**

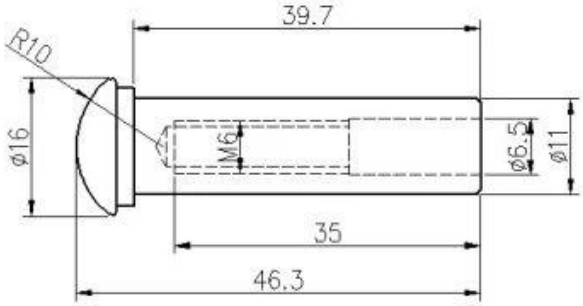


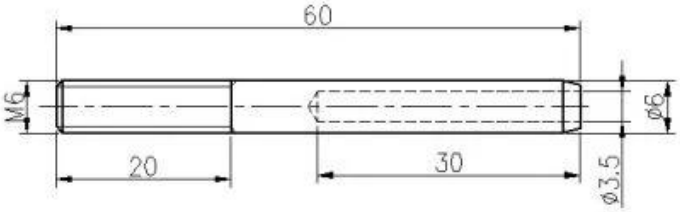


## Massatuotanto

**Pakkauskuva**

**Muutyypit/kaapelikiristimetovatsaatavilla**

## MitenettäAsentaakaapelikiristin?

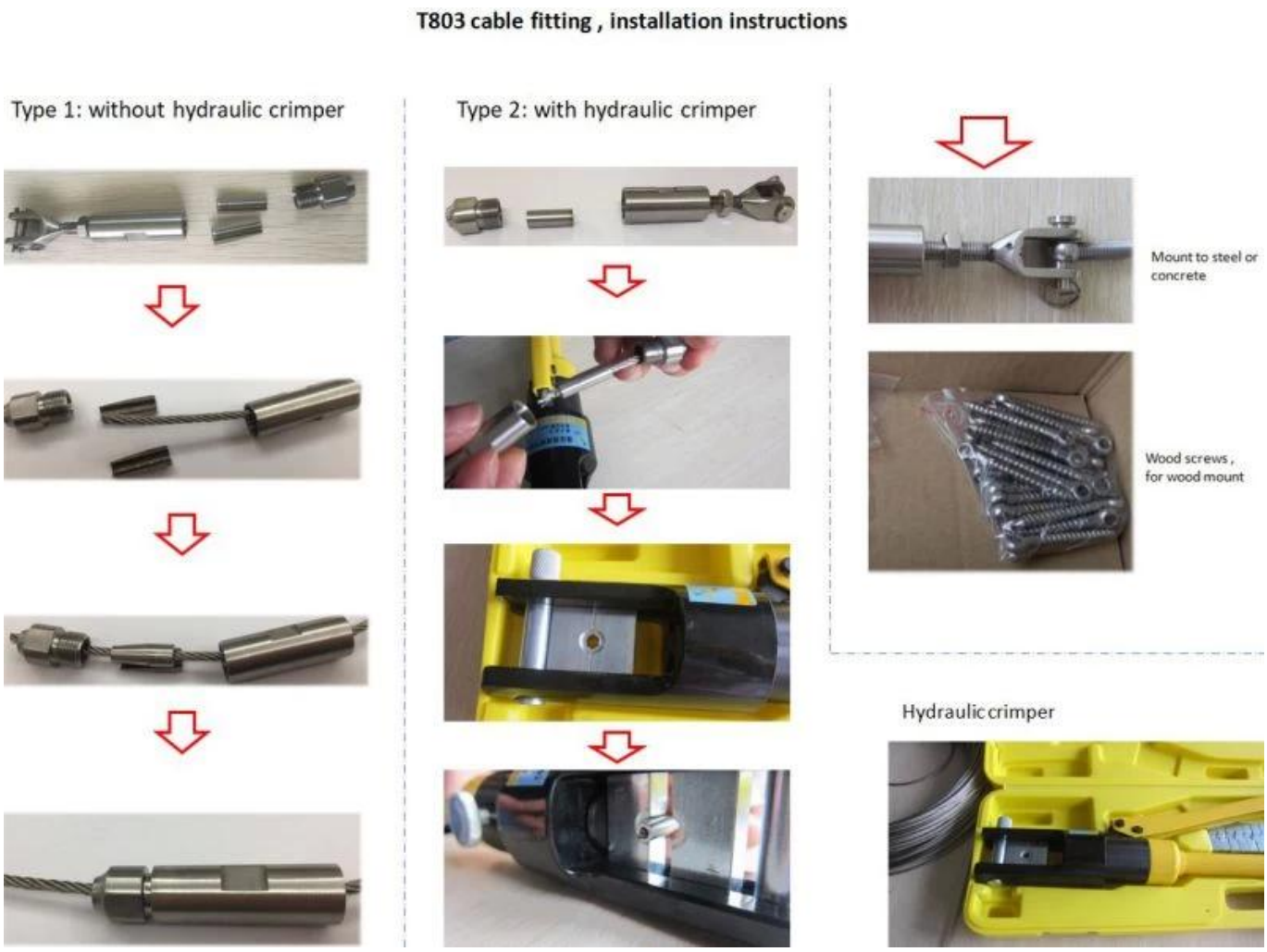


## Muuosatettärakentaaasaattaa loppuunkaapelikaide

**Kaapeli:**
**Saatavana 3 mm, 4 mm, 5 mm, 6 mm ja muita kokoja**

Kaapelikaide

Square post, vertical mount
40*40mm, 50*50mm recommended

Round post, vertical mount
Dia.: 42.4mm, 50.8mm recommended

Round post, side mount
Dia.: 42.4mm, 50.8mm recommended

## Projektinäytä

KEBIL科比奥®

KEBIL科比奥®

**Jos sinulla on kysyttävää heistä, ota rohkeasti yhteyttä minuun**
**Frank Fang**
**Sähköposti: sales02@launch-china.cn**
**Puhelin / WhatsApp / Wechat: +86159 0626 1741**