Pince de broche en verre de rampe d'escalier extérieure en acier inoxydable Duplex 2205pour10 à 12 mmsans cadreverregarde-corps.

#Fonctionnalitésdecollier de serrage en verre

Modèle No.	SBM
Article	Collier de serrage en verre
Matériel	Duplex 2205
terminer	satin, miroir, noir
la taille	168 mm
la taille du corps du robinet	50 * 50 mm
Poids	1,43 kg par pc
Emballage	1 pc dans une boîte, 12 pièces dans un carton
Épaisseur du verre	10 à 14 mm
MOQ	2 pièces

#Dessinsdecollier de serrage en verre

DESSIN POUR SBM-

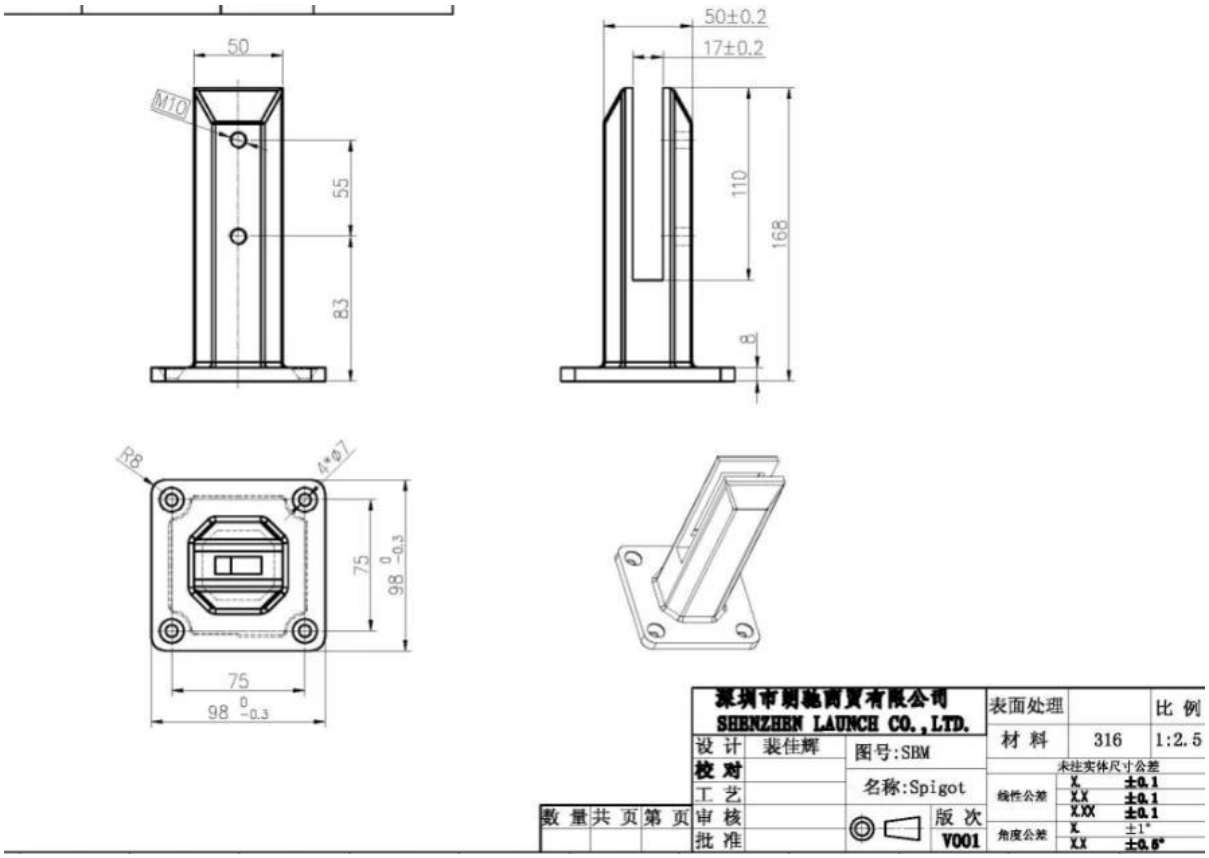

#Installationguiderdecollier de serrage en verre

fixing method: base plate spigots

Mark out the centre line of proposed glass fence with a chalk line. Determine clamp location based on a sheet size (recommendation on pages 1 & 2). Use base plate as a template to mark out the hole positions and drill holes to suit.

Note: Do not exceed 100mm gaps between glass panels. Optimum gap is 40mm to 60mm

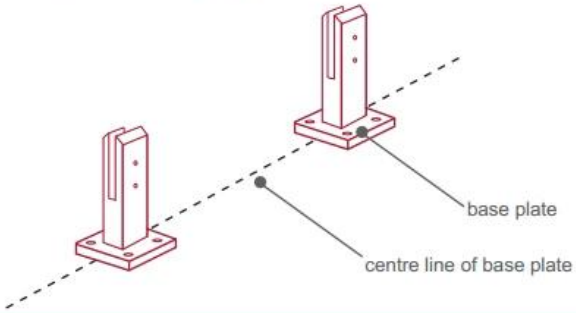

Now the base plated spigots can be fitted to the floor and plumbed via shims (not supplied) under the base plates. Be sure to tighten firmly as the smallest of movement at the base plate will result in noticeable movement at the bottom of the glass fence.

Tip: By setting the two outer spigots of your total span, a string line can be run in the 'throat' of the spigots, giving correct height for all spigots in between

Note: Do not exceed 100mm gap from the fixing surface to the bottom of the glass

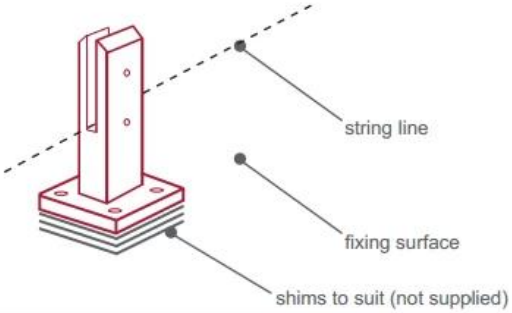

When all spigots are installed, slip domical cover the top of the spigot to hide fixings. It will be necessary to turn the adjustment screws on the spigot face all the way in to allow cover to pass over

Note: Same installation method applies to round base plate spigot

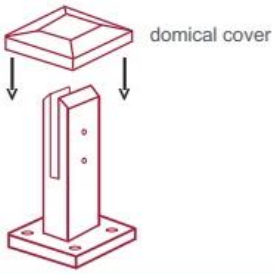

The glass is then installed to the spigots.
Place plastic packers between glass & spigot, at no stage should glass touch the metal

How adjustability works:

1. Place glass in spigot
2. Fix/ tension glass both sides with allen key

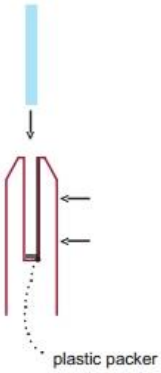

#Production&emballagedecollier de serrage en verre

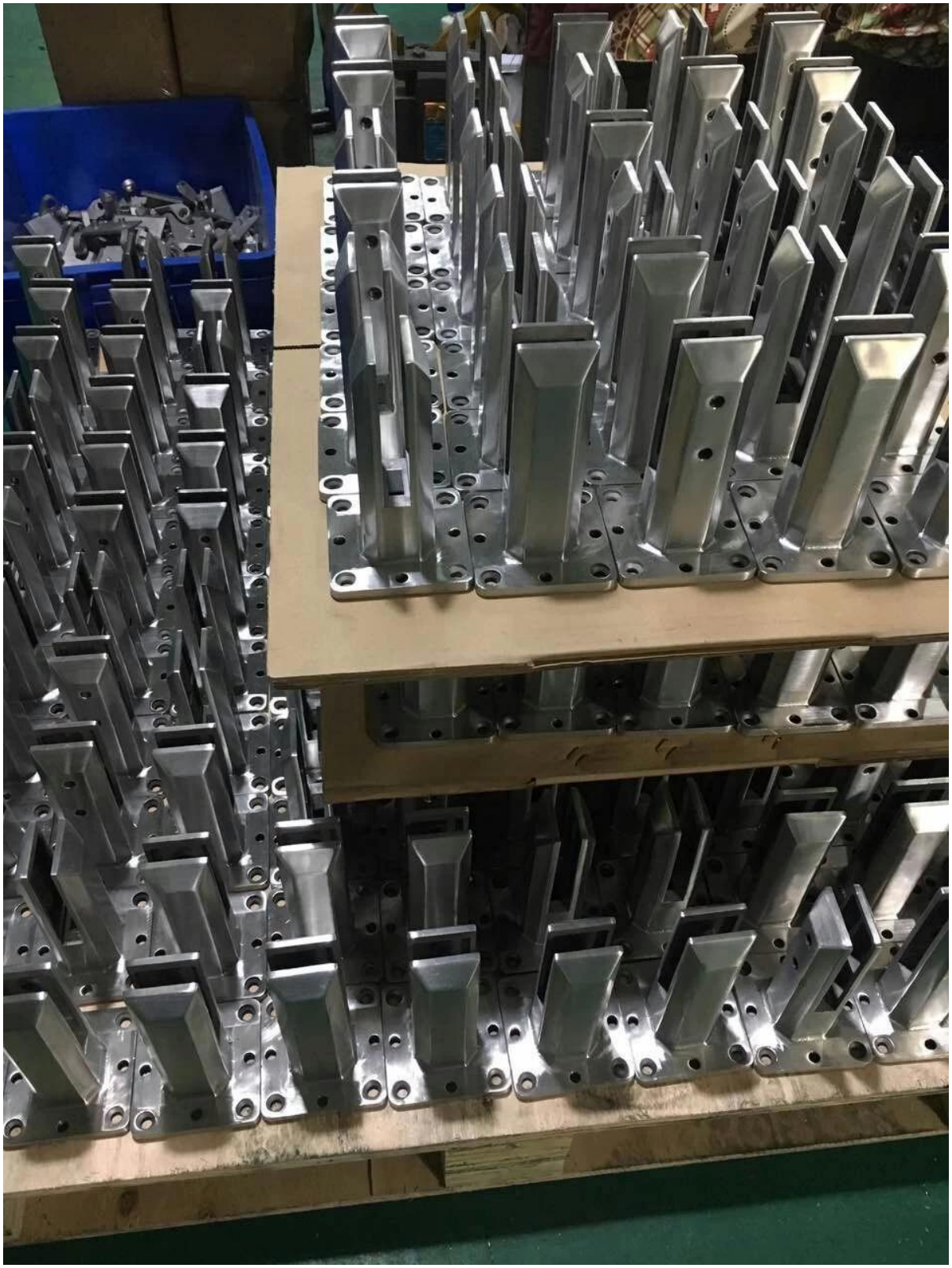

#Projetgalairesdecollier de serrage en verre

SHENZHEN LAUNCH CO., LTD

SHENZHEN LAUNCH CO., LTD

SHENZHEN LAUNCH CO., LTD