**Acier inoxydable Carré Verre Spigots Piscine Clôture Spigot Clamp Maison Jardin Escaliers Balustrade Garde-corps Balcon Verre Sol Clamp.**

| | |
|---|---|
| Numéro de modèle | SBM |
| Poids par pièce | 1,47 kg/ensemble |
| Emballage | 1 pièces dans une boîte blanche ; 12 pièces dans un carton 365*330*230mm |
| Matériel | Duplex 2205 ; SS 316 ; SS 304 |
| Finir | Noir , Miroir , Satin |
| Epaisseur du verre | 10mm-17.52mm |
| Appy | piscine en verre, jardin en verre, balustrade, escalier et ainsi de suite |
| Processus de production | Moulage de précision |
| MOQ | 2 pièces |
| Délai de mise en œuvre | 3 jours - 15 jours |

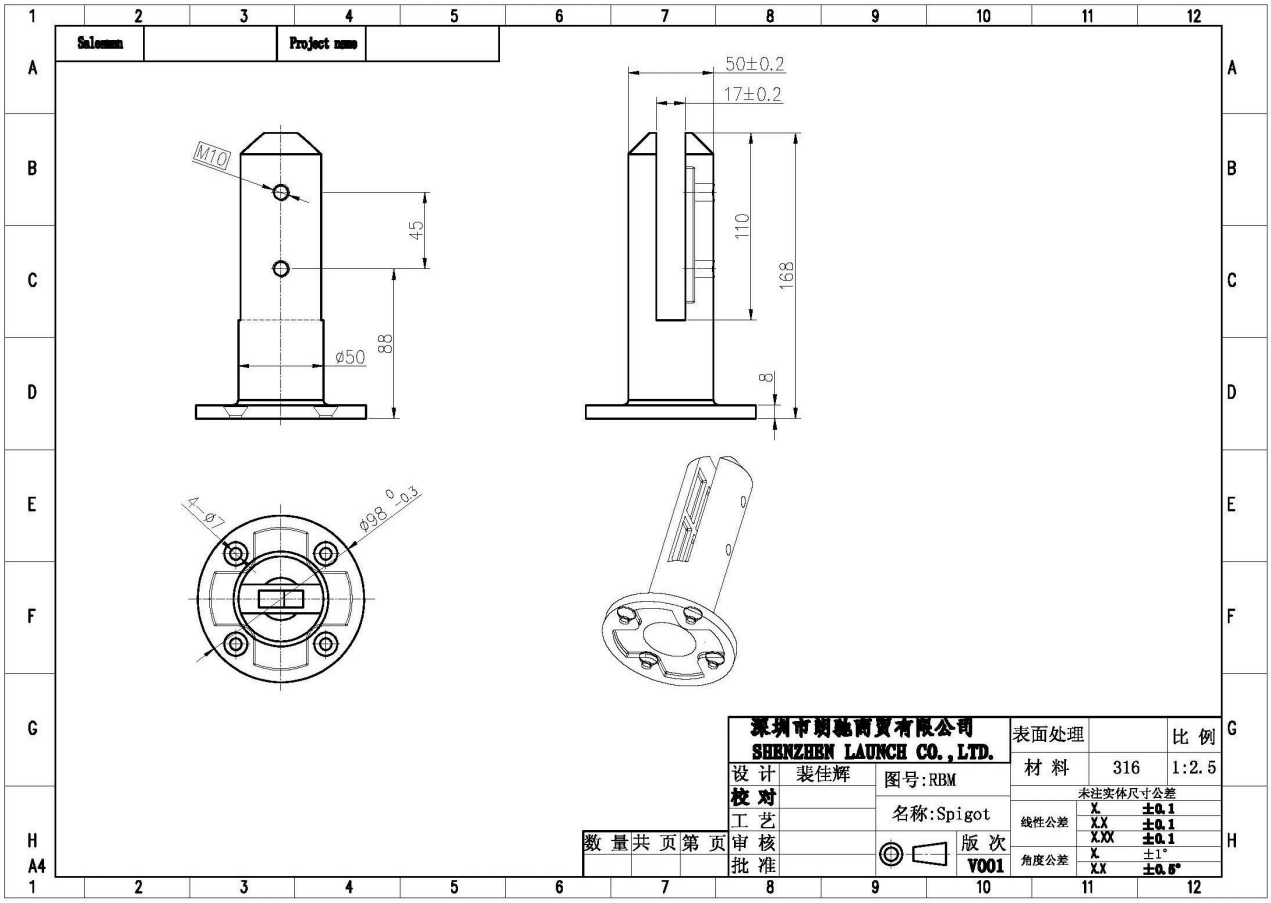


Rapport de test du matériau SS duplex 2205-

SPECTRO

12/16/2020 5:54:18 PM

Method: Fe-30

12/16/2020 5:54:09 PM

Comment: Cr-, Cr/Ni-steel

Type corr.concentr.

Type Standard 18--8

Sample Name:

Sample ID:

| | C | Si | Mn | P | S | Cr | Mo | Ni |
|---|---|---|---|---|---|---|---|---|
| | % | % | % | % | % | % | % | % |
| < x > (1) | 0.0224 | 0.8873 | 1.1010 | 0.0263 | 0.0032 | 21.6796 | 3.0718 | 5.5691 |

| | Al | Co | Cu | Nb | Ti | V | W | Pb |
|---|---|---|---|---|---|---|---|---|
| | % | % | % | % | % | % | % | % |
| < x > (1) | < 0.0005 | 0.0797 | 0.1603 | < 0.0002 | 0.0044 | 0.0893 | 0.0305 | < 0.0002 |

| | Sn | Sb | B | N | Fe | | | |
|---|---|---|---|---|---|---|---|---|
| | % | % | % | % | % | | | |
| < x > (1) | 0.0092 | < 0.0004 | 0.0024 | 0.1024 | 67.1600 | | | |

Instructions d'installation de la pince à ergot de clôture de piscine en verre carré en acier inoxydable -

# fixing method: base plate spigots

Mark out the centre line of proposed glass fence with a chalk line. Determine clamp location based on a sheet size (recommendation on pages 1 & 2). Use base plate as a template to mark out the hole positions and drill holes to suit.

**Note:** Do not exceed 100mm gaps between glass panels. Optimum gap is 40mm to 60mm

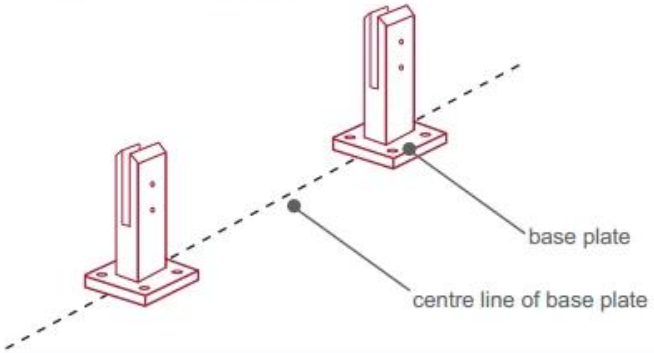


Now the base plated spigots can be fitted to the floor and plumbed via shims (not supplied) under the base plates. Be sure to tighten firmly as the smallest of movement at the base plate will result in noticeable movement at the bottom of the glass fence.

**Tip:** By setting the two outer spigots of your total span, a string line can be run in the 'throat' of the spigots, giving correct height for all spigots in between

**Note:** Do not exceed 100mm gap from the fixing surface to the bottom of the glass

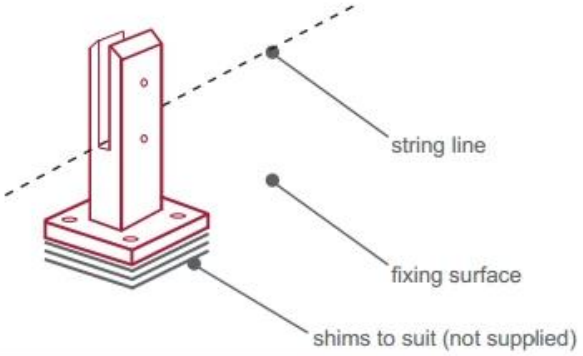


When all spigots are installed, slip domical cover the top of the spigot to hide fixings. It will be necessary to turn the adjustment screws on the spigot face all the way in to allow cover to pass over

**Note:** Same installation method applies to round base plate spigot

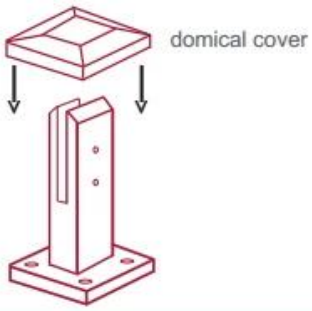


The glass is then installed to the spigots.
Place plastic packers between glass & spigot, at no stage should glass touch the metal

**How adjustability works:**

1. Place glass in spigot
2. Fix/ tension glass both sides with allen key

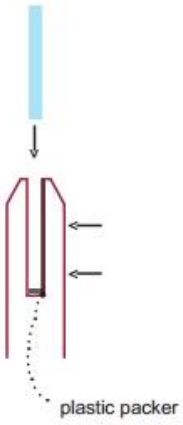


Photos de l'installation du projet de la pince à ergot de clôture de piscine en verre carré en acier inoxydable -

切換工作台模式或聊天