Pince de fixation en acier inoxydable, balcon Juliette et système de verre boulonné

Nom du produit	Pince de fixation en acier inoxydable, balcon Juliette et système de verre boulonné
Numéro de modèle	SF-50T
Matériel	Acier inoxydable 304/316
terminer	Miroir poli ou satiné
Taille du verre	Bouchon 50x12mm, corps 50x44mm, base 200 * 100 * 10
Pour épaisseur de verre	12-19mm, ou selon les exigences des clients
Trou de verre percé	Diamètre 14mm requis dans le verre
Poids net	3236g / pièce
Montage	substrat en bois, acier ou béton
MOQ	Une pièce
Échantillon	Disponible
OEM & Service ODM	Acceptable
Application	Conception d'escaliers intérieurs et extérieurs, balustrade de balcon, balustrade de pont sans cadre en verre, conception de balcon Juliette, escalier flottant
Inspection d'usine	Disponible
Emballage à distance	Une pièce dans un sac à bulles, puis dans une boîte blanche, 12 pièces dans un carton ou emballage selon les demandes du client

Exposition de produit:

KEBIL科比奥®

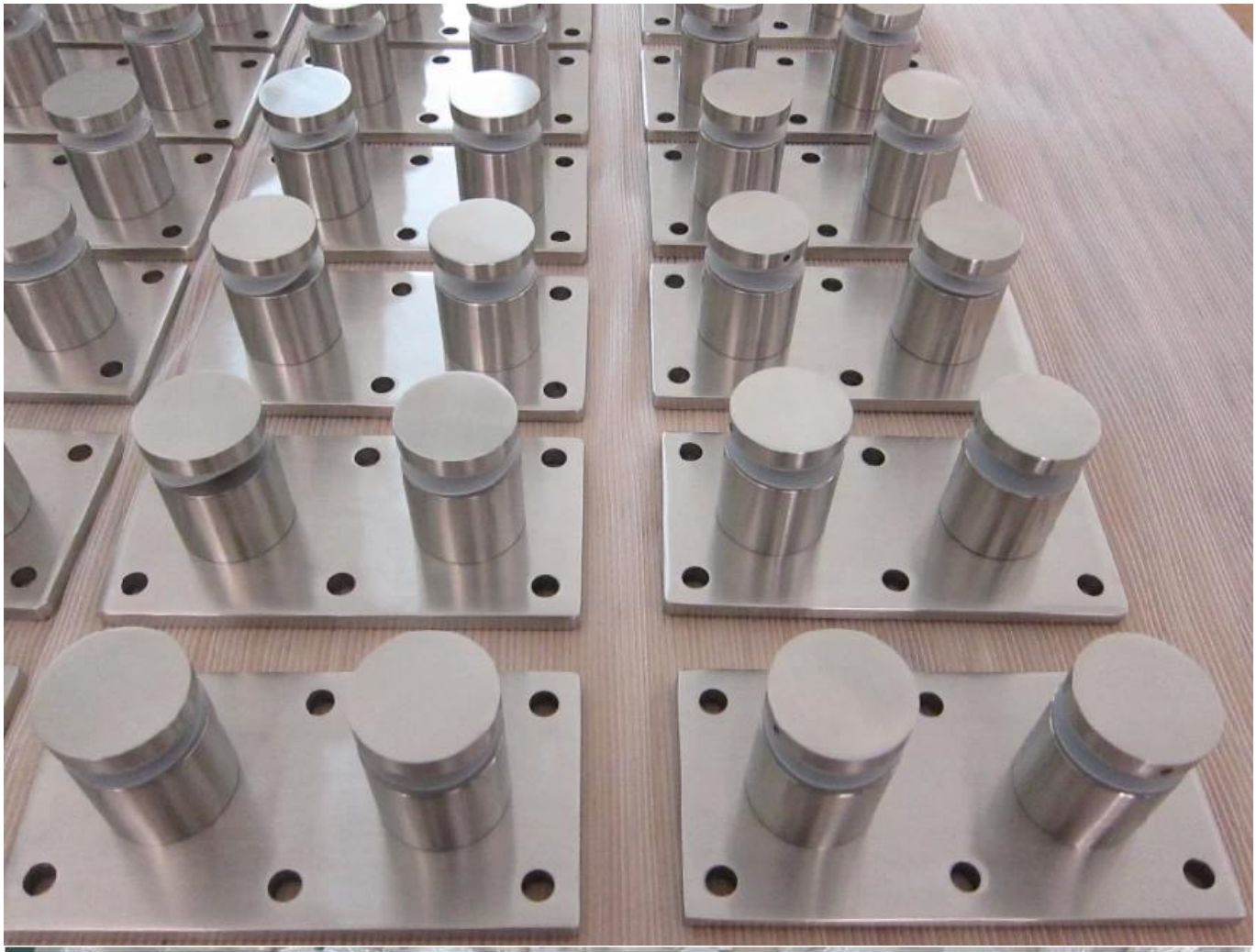

Dessin technique:

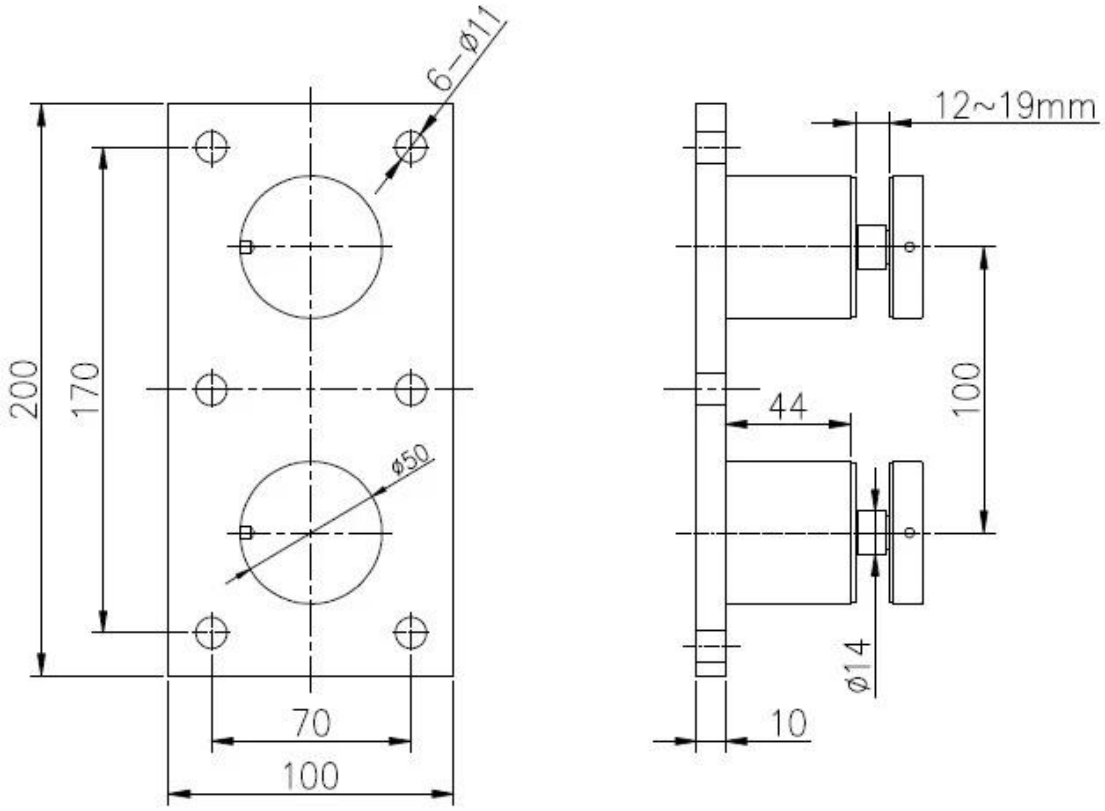

Photos du projet:

AUTRES TYPES DE SUPPORTS EN VERRE POUR RAILING DISPONIBLES:
Diamètre 50mm Verre Standoff dans **Miroir / Modèle satiné modèle SF-50**:

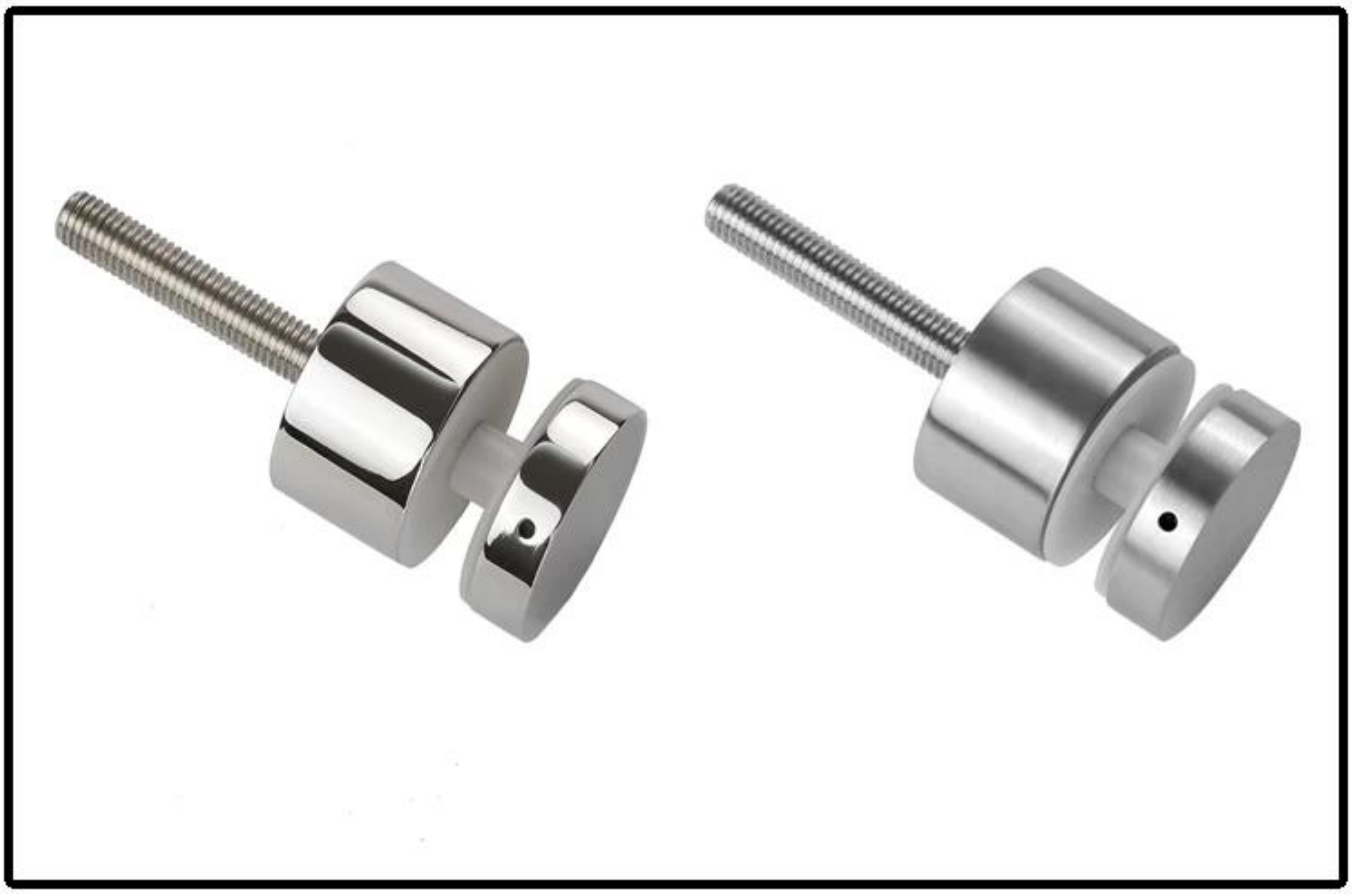

Avec boulon en béton & vis à bois modèle SF-50W:

Dessin technique:

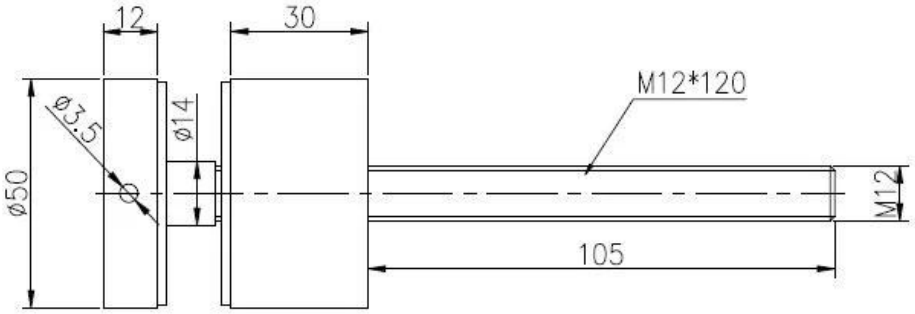

Salesman		Project name	

深圳市朝驰商贸有限公司 SHENZHEN LAUNCH CO.,LTD.			
Design	Jacky	Drawing NO:	
Check			
Craft		Name:Standoff	
Audit			Revision
Approve			V001

Quantity	Total	Page

Surface treatment		Propotion
Material	SS 316	1:1
No note of outity size tolerance		
Linear tolerance	X.	±0.1
	X.X	±0.1
	X.XX	±0.1
Angle tolerance	X.	±1°
	X.X	±0.5°

A4

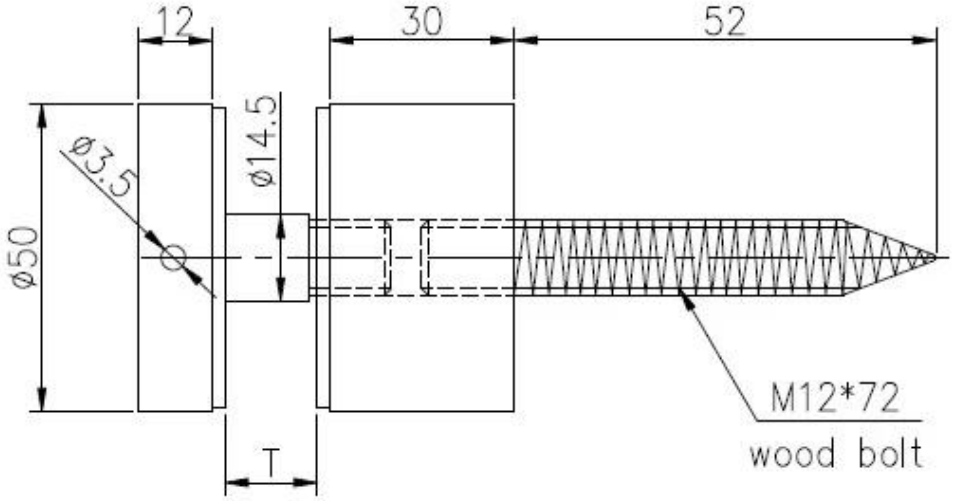

			深圳市朗驰商贸有限公司 SHENZHEN LAUNCH CO.,LTD.				Surface treatment		Propot	
			Design	Jacky	Drawing NO:SF-50		Material			1:1
			Check				No note of entity size tolerance			
			Craft		Name:Standoff		Linear tolerance	X.	±0.1	
Quantity	Total	Page	Audit			Revision		X.X	±0.1	
			Approve			V001		X.XX	±0.1	
							Angle tolerance	X.	±1°	
								X.X	±0.5°	

Photos du projet:

entretoise extérieure et intérieure en verre, conception de balustrade en verre sans cadre, support en acier inoxydable, broche en verre

Socle en verre en acier inoxydable pour balustrade en verre sans cadre

entretoise en acier inoxydable, support pour panneaux de verre, conception de garde-corps

Information d'entreprise:

Shenzhen Launch Co., Ltd was established in 2004, located at Nanshan District, Shenzhen, and one hour by car from Hongkong International Airport. Our main product is high-grade building materials includes stainless steel balustrade post, staircase handrail, balcony guardrail, swimming pool fence and other high-grade building materials. All the products are designed strictly according to the high-end market requirements. We have our own factory in Tangxia Town, Dongguan, has a variety of precision equipment more than 50 sets: CNC lathe, milling machine, punching machine, pipe cutter, argon welder, drilling machine, polisher, etc. which can provide customers with complete product processing services. With the German SPECTRO Spectrometer, we insist on testing every batch of materials to ensure that the material is highly qualified. We also have hardness gauge, secondary element and other test equipment to ensure the products meets customers' requirements.

ABOUT US

OUR ADVANTAGE

Please do not hesitate to contact us if you have any requirement regarding our production lines, you can expect a timely reply with professional solutions!

Own factory, shortest lead time.

Can help customers design product drawings based on customer ideas and design engineering installation drawing according to the customer site sketch.

Sample order, trial order acceptable.

Provide material test report to ensure that the material is qualified.

13 years of industry experience, we can help customers recommend the best solution to help customers save cost.

OUR FACTORY

More than 13 years experience in hardware industry design and processing, we can provide customized services from design to the sample and small batch trial production.

OUR CERTIFICATE

With premium quality, competitive price and superior service, we won a lot of customers' favor.
Our products are popular in North America, European and Australia.

PRODUCTION PROCESS

Casting

CNC lathe

CNC Milling

Stamping

Drilling & Tapping

Polishing

PAYMENT & TRANSPORTATION

Welcome Alibaba Trade Assurance Order!

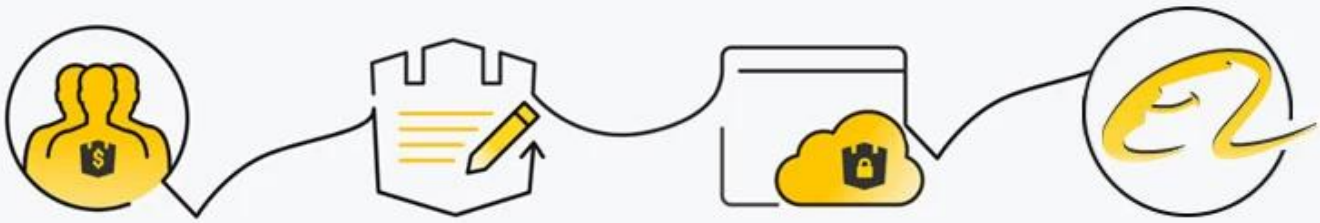

1. Start an order
2. Negotiate terms with our sales service & confirm order
3. Make payment
4. Alibaba provide full assurance

PayPal MasterCard VISA HSBC

FAQ

1. What materials do you have?

SS304, SS316, SS316L, Duplex 2205, etc.

2. Can you send me your whole price list?

Sorry, as the price related to many factors, such as quantity, material type, surface treatment and so on, we will offer you exact quote after we confirm your detailed requirements.

3. Do you offer OEM & ODM service?

Yes, we can make the products according to your technical drawings or samples, we are professional in investment casting, die casting, stamping, CNC machining, etc.

4. What kind of payment you accept?

T/T, L/C, PayPal, West Union, etc.

5. What is your payment term?

TT(30/70) or LC at sight.

6. What is your delivery time?

Within 5 workdays for hot-sale items, 15-25 workdays for batch orders.

7. Do you offer after-sales service?

Of course, any question after you purchase our products, we will get back to you within 24 hours.

Contactez-nous maintenant pour plus d'informations!
Email: sales03@launch-china.cn
Mob: +8615907334556

KEBIL科比奥® SHENZHEN LAUNCH CO.LTD
LAUNCH INTERNATIONAL LIMITED

Eve Chow

Sales representative

M : +86 159 0733 4556

T : +86 755 8603 7559

E : sales03@launch-china.cn

A : B5-5003, Yilida Bldg, Nanshan District, Shenzhen