TourBaseMontertaperDuplex2205Spigot de clôture en verre en verre en acier inoxydable pour 1/2 "d'épaisseurverre.

1. Caractéristiques deSpigot de clôture en verre en verre en acier inoxydable pour verre de 1/2 ", Rbm

SPGOTcorps	Duplex 2205
Matériau pour vis, couvercle de base, plaque de nivellement	Acier inoxydable 316
Finir	Brossé / poli / noir / or
Épaisseur du verre	10-13.52mm verre d'épaisseur
Hauteur	168mm; ou peut être personnalisé
Joint en plastique	Fabriqué en nylon, il peut durer du temps tout au long de la vie
Boulon en béton pour convenir	M8 * 100
Poids unitaire par pc	1,2 kg
En stock	Oui
Moq	2 pcs

2.DimensionsdeRbmverrerobinet-

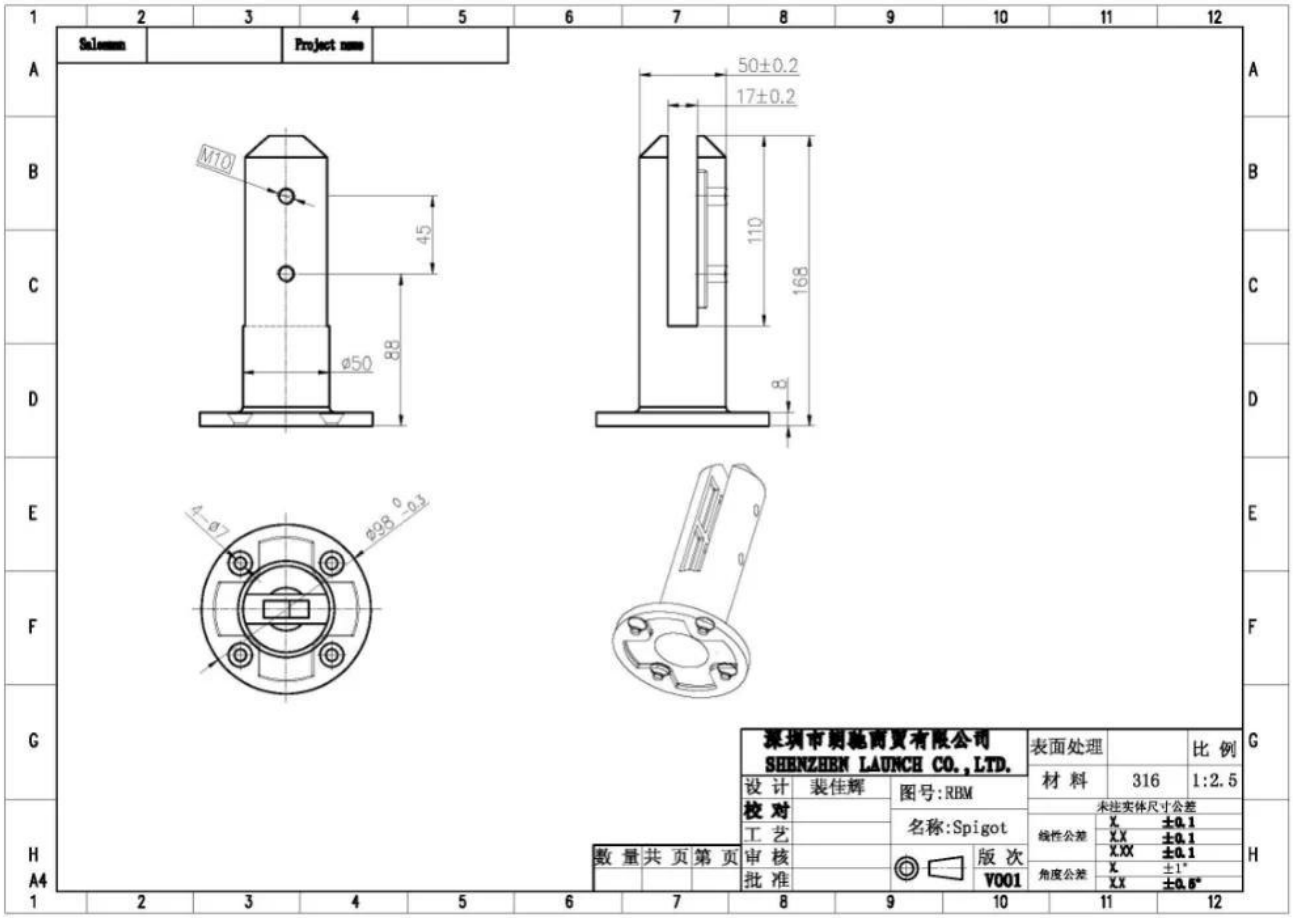

3.Chargementtest&Matériel Spigot de clôture en verre en verre en acier inoxydable**-**

LOADING TEST FOR SBM

Introduction

MTS Metallurgical Testing Services was engaged to witness the installaton of a sample pool fence spigot and to subsequently conduct load tests on the spigot to the requirements of Australian Standard AS1926.1 - 2012.

Standard/Specification AS 1926.1 - 2012, Section 3.2 and Appendix B

Results Summary
(For details of individual tests, refer to the tables on the following pages.)

ID	Item/Heat No.	Dimensions/Type/Details	Finish	Overall Assessment
14117/01	SSBM316	50mm Square, Base Plate 316 Stainless steel	316l	COMPLIES

Remarks

After completion of the testing, the spigot was found to be in sound condition with no breakage, tearing or signs of fracture and no looseness of the fixings.

Colin Lorimer
Metallurgical Testing Manager

NATA Accreditation No: 15624
Accredited for compliance with ISO/IEC 17025

Strength Test

Test Specification AS 1926.1 - 2012, Appendix B

Test Procedure MTS-TP3.1 Compression Tests - Products

Specimen ID	Observations	Assessment
14117/01	Test Equipment: Hydraulic ram and 10,000 N load cell Test Load: 330N Load Duration: 45 Secs Deflection under load: 1 mm Permanent Deflection after removal of test load: 0 mm	COMPLIES

Requirements No permanent damage or loosening of fixings.

SPECTRO

12/16/2020 5:54:18 PM

Method: Fe-30

12/16/2020 5:54:09 PM

Comment: Cr-, Cr/Ni-steel

Type corr.concentr.

Type Standard 18--8

Sample Name:

Sample ID:

	C	Si	Mn	P	S	Cr	Mo	Ni
	%	%	%	%	%	%	%	%
< x > (1)	0.0224	0.8873	1.1010	0.0263	0.0032	21.6796	3.0718	5.5691

	Al	Co	Cu	Nb	Ti	V	W	Pb
	%	%	%	%	%	%	%	%
< x > (1)	< 0.0005	0.0797	0.1603	< 0.0002	0.0044	0.0893	0.0305	< 0.0002

	Sn	Sb	B	N	Fe			
	%	%	%	%	%			
< x > (1)	0.0092	< 0.0004	0.0024	0.1024	67.1600			

4InstallationInstructionspourRbmverrerobinet-

fixing method: base plate spigots

Mark out the centre line of proposed glass fence with a chalk line. Determine clamp location based on a sheet size (recommendation on pages 1 & 2). Use base plate as a template to mark out the hole positions and drill holes to suit.

Note: Do not exceed 100mm gaps between glass panels. Optimum gap is 40mm to 60mm

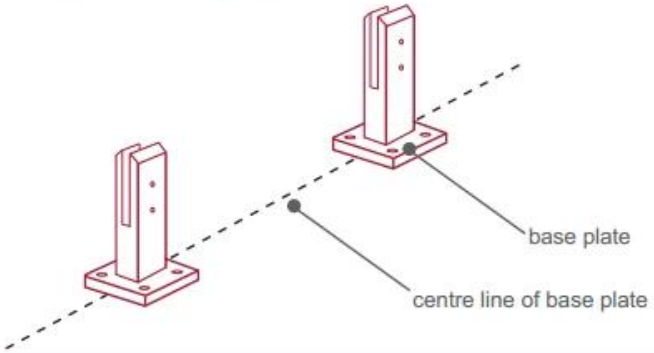

Now the base plated spigots can be fitted to the floor and plumbed via shims (not supplied) under the base plates. Be sure to tighten firmly as the smallest of movement at the base plate will result in noticeable movement at the bottom of the glass fence.

Tip: By setting the two outer spigots of your total span, a string line can be run in the 'throat' of the spigots, giving correct height for all spigots in between

Note: Do not exceed 100mm gap from the fixing surface to the bottom of the glass

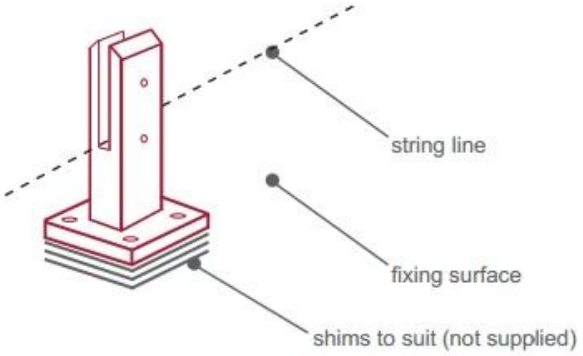

When all spigots are installed, slip domical cover the top of the spigot to hide fixings. It will be necessary to turn the adjustment screws on the spigot face all the way in to allow cover to pass over

Note: Same installation method applies to round base plate spigot

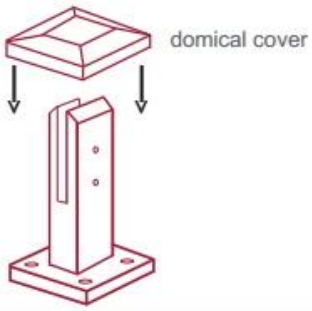

The glass is then installed to the spigots.
Place plastic packers between glass & spigot, at no stage should glass touch the metal
How adjustability works:
1. Place glass in spigot
2. Fix/ tension glass both sides with allen key

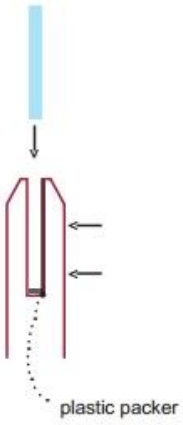

5Emballagedes détailspourRbm-

1 pc dans une boîte blanche; 12 pcs dans un carton-

2014/03/19

6MasseProductionTraiterpourSbmverrerobinet-

7.Suitedes modèlesdeverrerobinetpourtonsélection-

Glass spigot

MODEL # SBM

MODEL # SCM

MODEL # RBM

MODEL # RCM

8ProjetPhotosdeSans cadreVerreBalustradeavecverrecrampons-

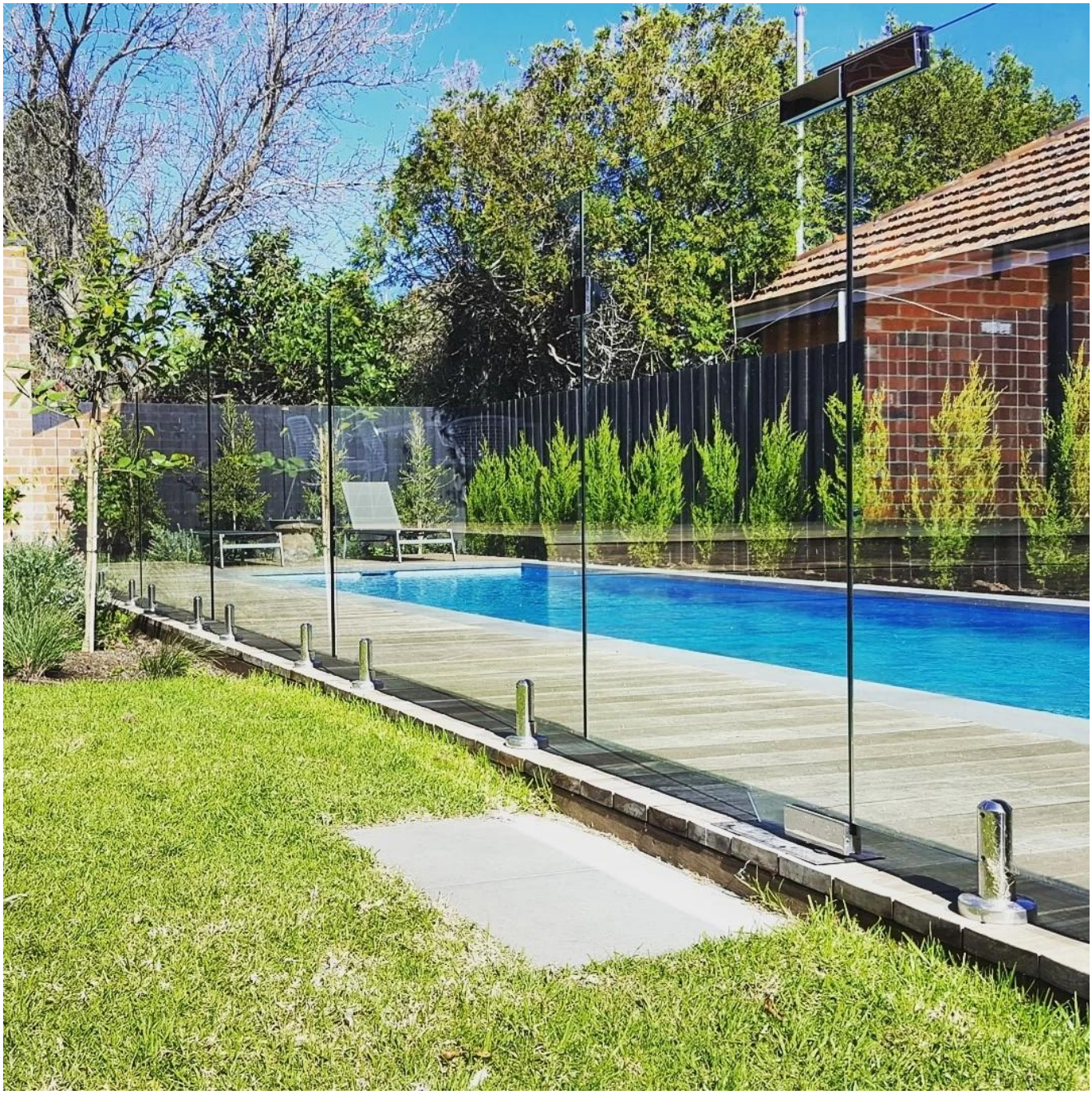

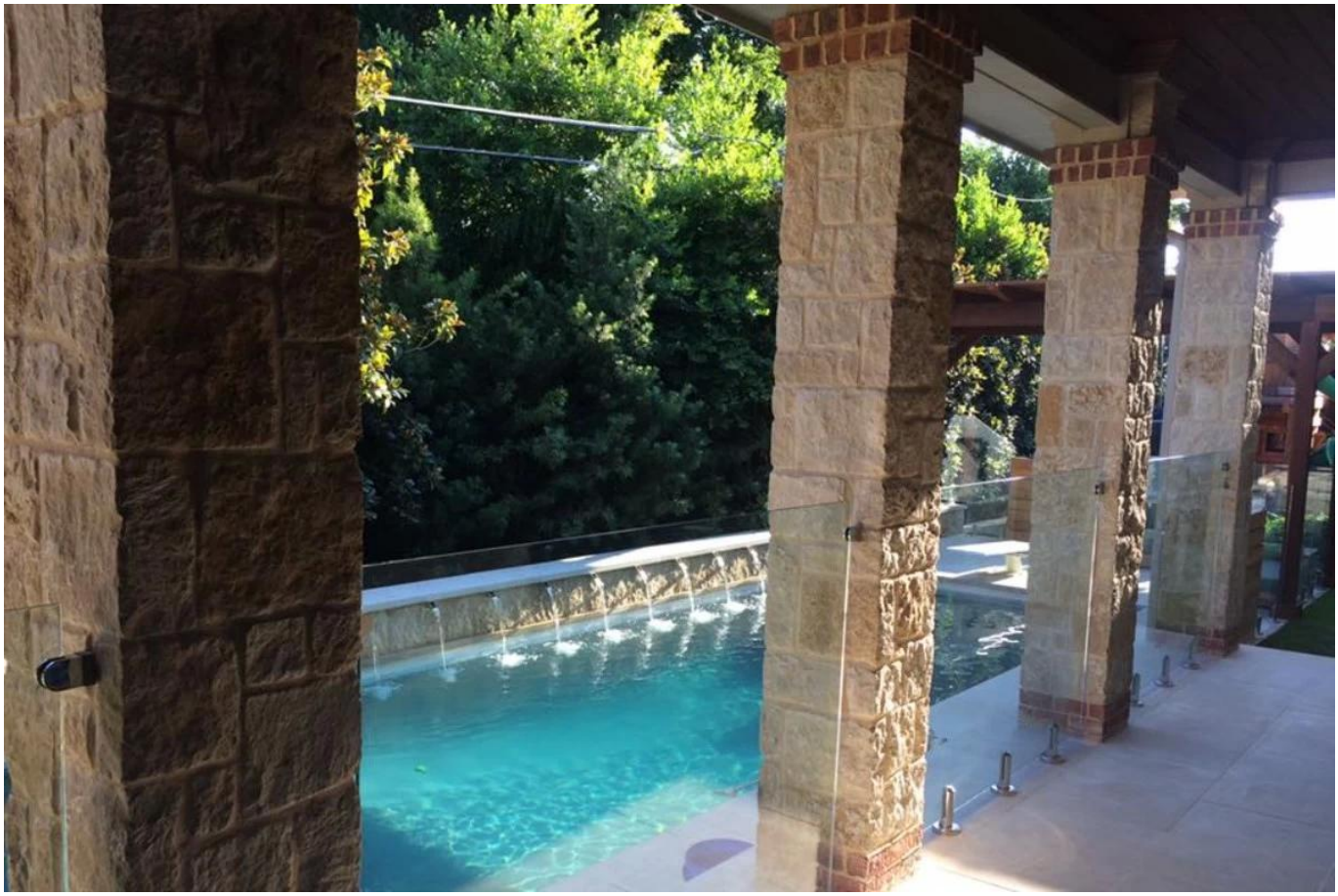

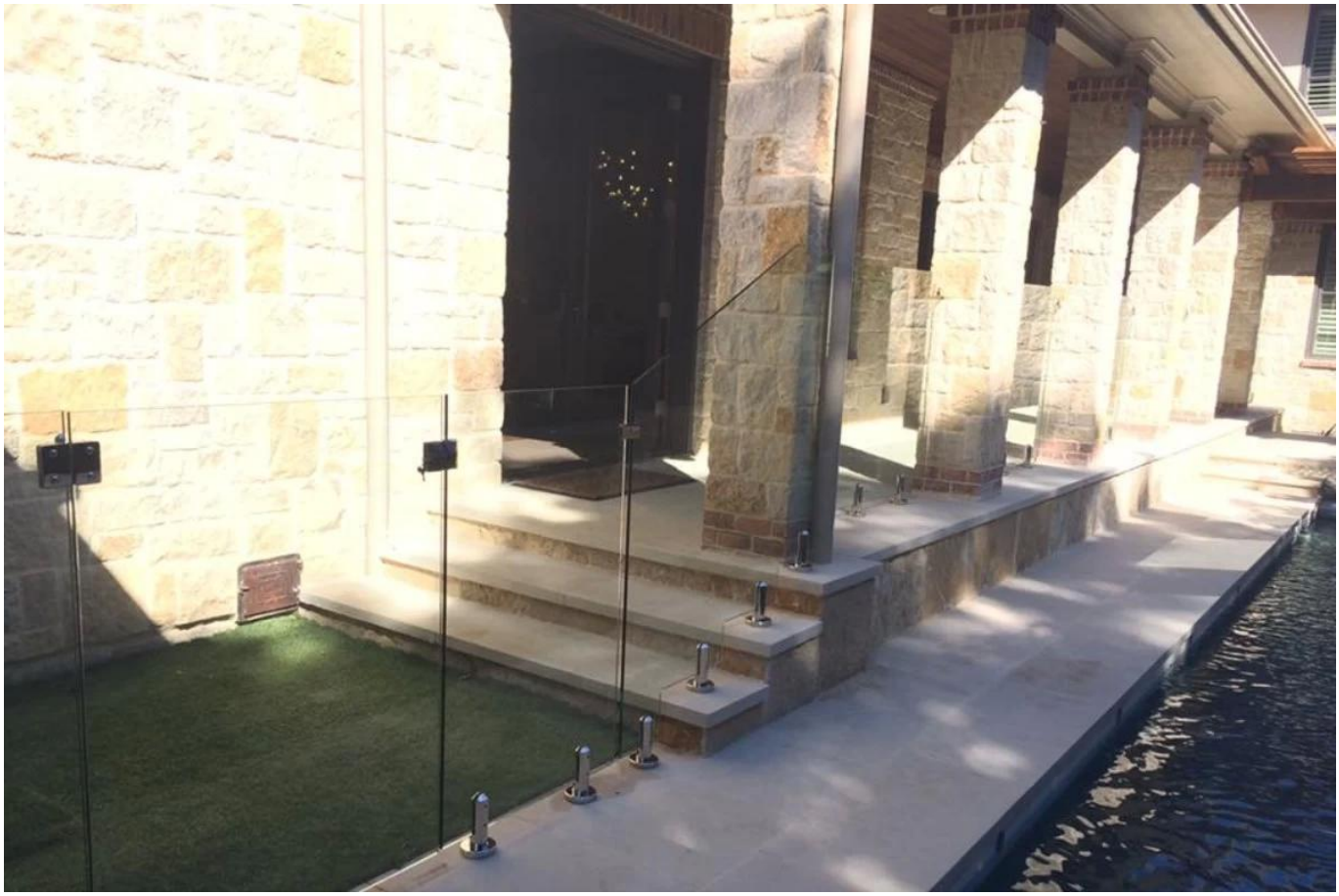

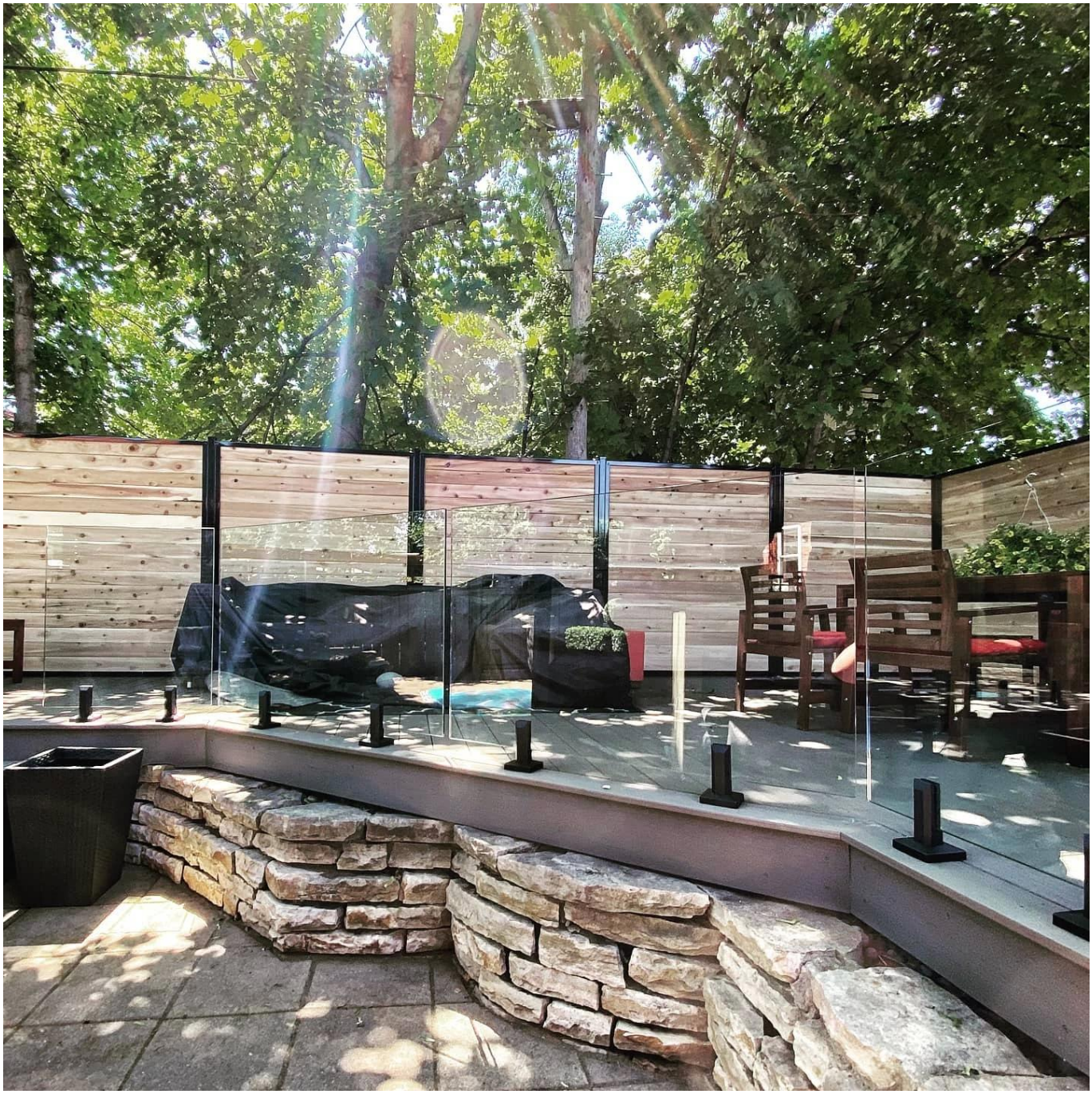

Nous avons également des charnières en verre et des loquets magnétiques et des pinces de verre et du verre trempé pour aller avec l'ensemble du système de garde-corps en verre sans cadre.

N'hésitez pas à nous contacter maintenant pour obtenir des devis!

Shenzhen lance Co., Ltd
Vérifié par SGS, rapport N ° 19536352_P + T
Office Ajouter:
B5-003, 5 / F-Block 3, Yilida Building, N ° 1092 Nanshan Road, District de Nanshan, Shenzhen, Chine, Code Postal 518054

Tél: 86-755-86037559 Fax: 86-755-86372611

MOB (WhatsApp, Wechat, Viber) +86 135 9027 3543

Contacter:CeliaChen