Shenzhen Launch a été créé en 2004 et nous sommes fournisseur d'or de SGS depuis 16 ans. Nous sommes des fabricants et des fournisseurs fiables.

COMPANY INTRODUCTION

Verification Type: Supplier Assessment Onsite Check

Country / Region: Guangdong, China ✓

Year Established: 2004 ✓

Main Products: CNC Machining Parts,Stamping Pa... ✓

Main Markets: North America, Oceania, Mid East,... ✓

Total Annual Revenue: confidential ✓

Total Employees: 11 - 50 People ✓

Alibaba.com Gold Plus Supplier

Main Product Lines Verification Report

Presented to

Shenzhen Launch Co., Ltd.

深圳市朗驰商贸有限公司

Company Address	B5003, Building 3, Yilida Building, No. 1092 Nanshan Avenue, Dengliang Community, Nanshan Street, Nanshan District, Shenzhen City, Guangdong Province, China
Consigner of Assessment:	Alibaba
Gold Supplier Member ID:	launch168
Gold Supplier Company Name:	Shenzhen Launch Co., Ltd.
Contact Person:	Mr. Binfeng Gao
Phone Number:	0086-13802569770
Fax Number:	0086-755-86372611
Email:	gbf999@china.com
Website Address (URL):	http://launch-china.en.alibaba.com

Service Provided by SGS
Report No.: 19536352_P+T

Alibaba.com Global trade starts here. SGS

Alibaba.com Gold Plus Supplier

Verified

Assessment Report

Presented to

Cooperation Company of Shenzhen Launch Co., Ltd.

深圳市朗驰商贸有限公司合作工厂

Gold Supplier & Assessed Company Relationship:	☐ Self-owned ☐ Wholly Owned ☐ Shareholder/Partner ☐ Kindred between Owners ☒ Cooperation Partner
Company Address	Confidential
City / Country:	Huizhou / China
Consigner of Assessment:	Alibaba & Shenzhen Launch Co., Ltd.
Gold Supplier Member ID:	launch168
Gold Supplier Company Name:	Shenzhen Launch Co., Ltd.
Contact Person:	Confidential
Phone Number:	Confidential
Fax Number:	Confidential
Email:	Confidential
Website Address (URL):	http://launch-china.en.alibaba.com

Service Provided by SGS
Report No.: 19552720_P

Alibaba.com Global trade starts here. SGS

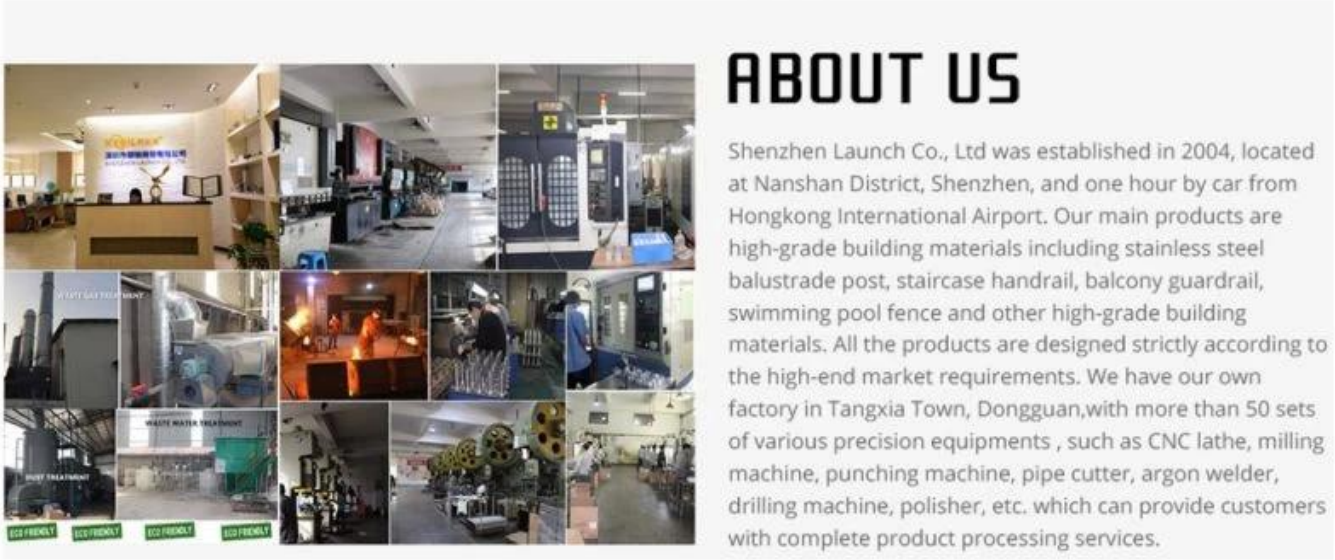

ProduitSpectacle

Nom du produit	Poteau de balustrade en verre court
Matériel	304SS / 316SS / aluminium
Finition de surface	Satin / Miroir / Autre
Épaisseur du verre	10 à 16 mm
Application	Système de garde-corps en verre pour l'intérieur et l'extérieur

Poteau de balustrade en verre court

Balustrade Short Post

Aluminum post
(aluminum 6063 T5)

*400mm hight
*50x50x3mm tube
*50x5mm plate

Finish:
anodizing
powder coating

Stainless steel post
(SS 316)

*400mm hight
*50x50x1.5mm tube
*50x5mm plate

Finish:
polished
brushed

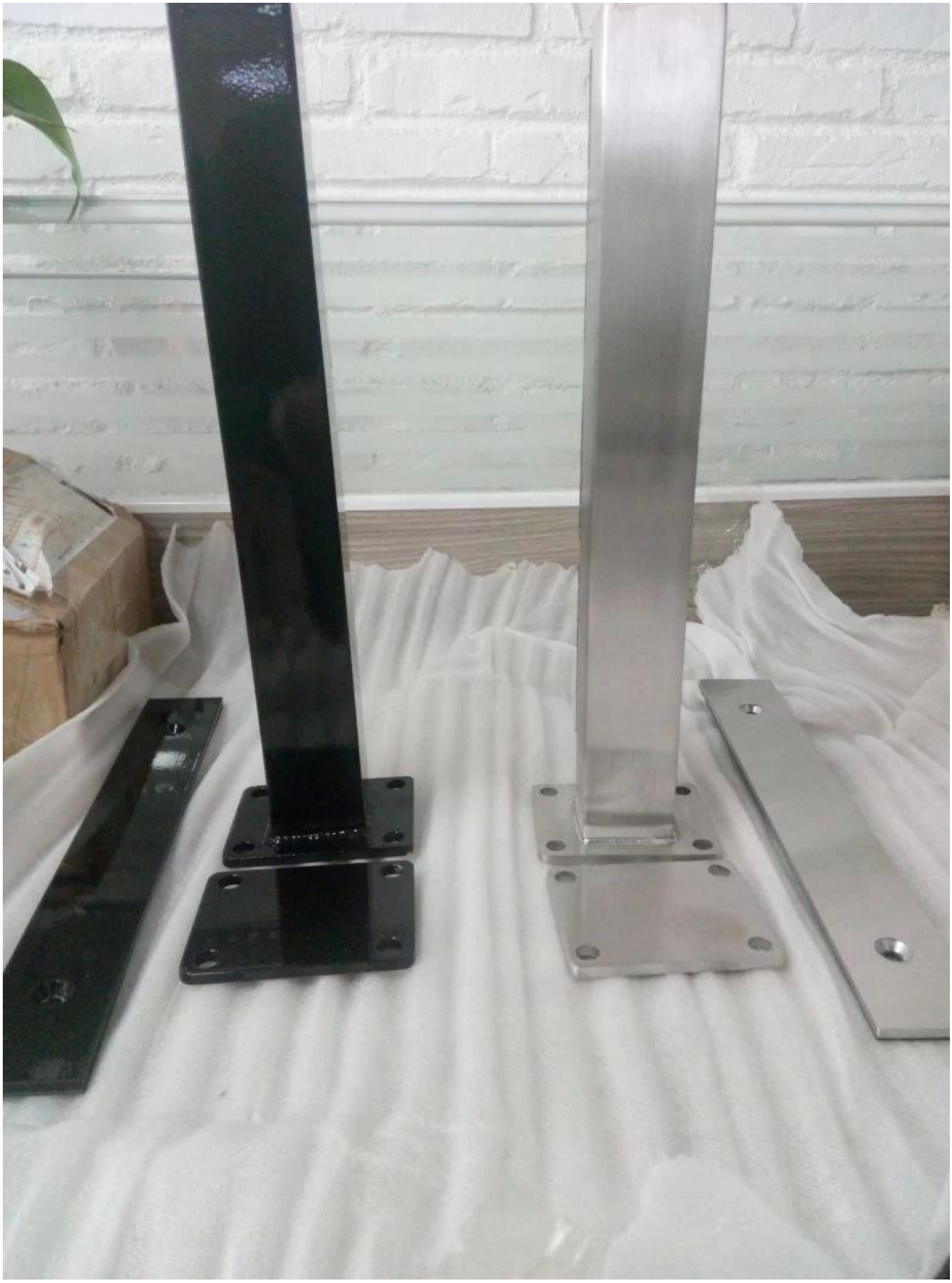

Production de masse

Dessin de poste

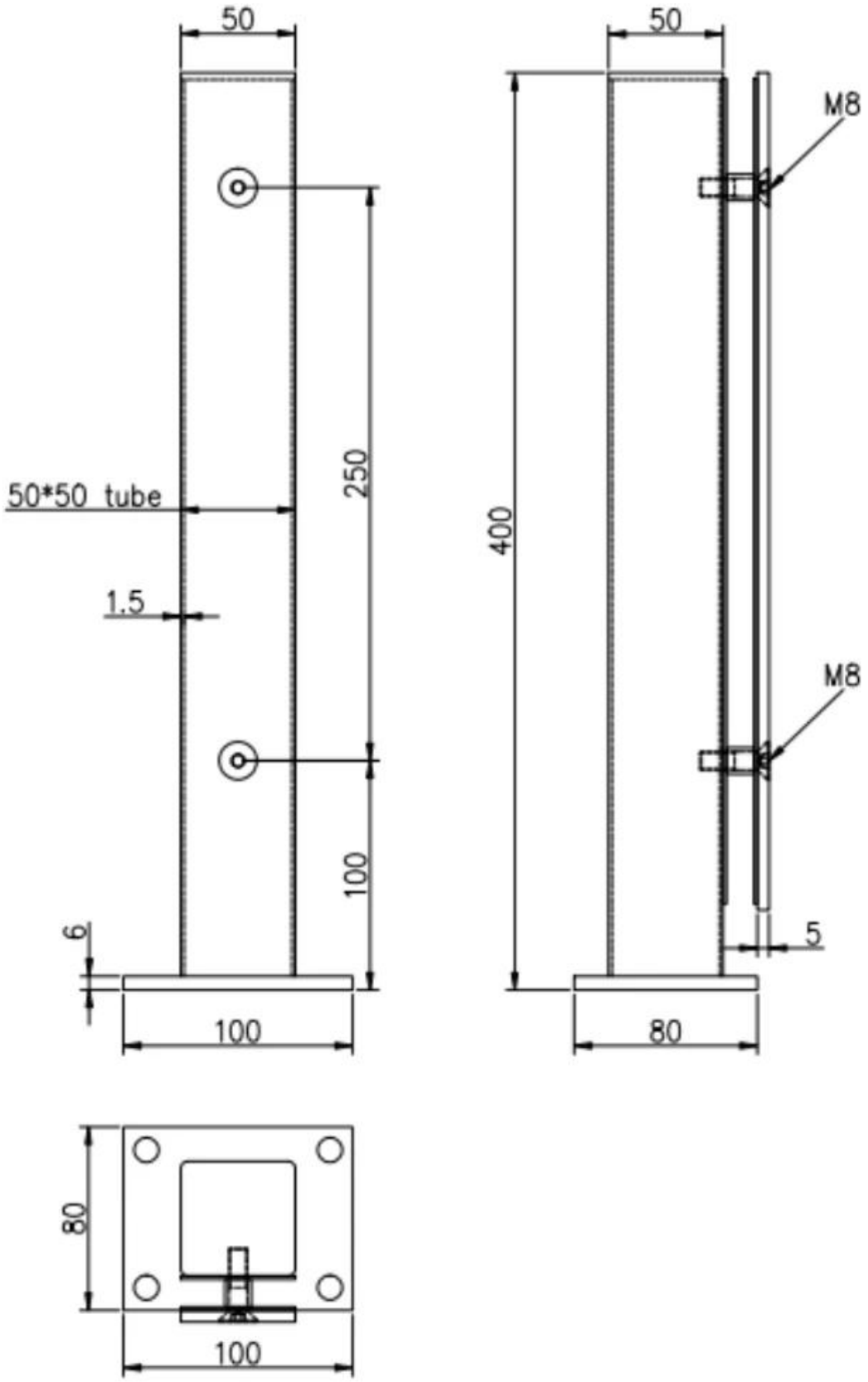

Dessin de trou de verre de forage

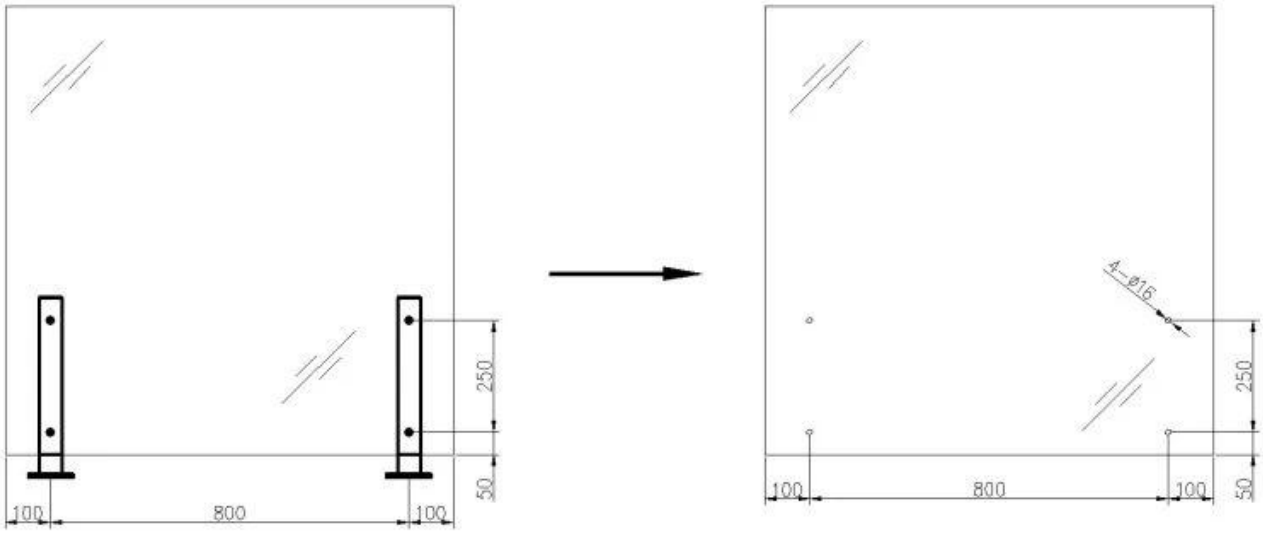

Photo du projet

Si vous avez des questions pour eux, n'hésitez pas à me contacter
Frank Fang
Courriel: sales02@launch-china.cn

Téléphone / WhatsApp / Wechat: +86159 0626 1741