Bâti de mur d'acier inoxydable de conception de balustrades d'escalier en dehors de l'entretoise réglable de verre

Caractéristiques:

Nom du produit	Socle en verre, garde-corps en verre, socle en verre, socle en verre réglable
Matériel	Acier inoxydable 304/316
Autre nom	goupille en verre, boulons
terminer	Miroir poli ou satiné poncé
Taille du verre	1 1/2 '' x 1 1/2 '', vis à bois M12 * 120mm, joint en caoutchouc silicone inclus
Pour épaisseur de verre	12-19mm, ou selon les exigences des clients
Trou de verre percé	Diamètre 14mm requis dans le verre
Poids net	495g / pièce
Montage	montage mural / montage latéral / montage sur fascia
MOQ	10 morceaux
Échantillon	Disponible
OEM & Service ODM	Acceptable
Application	Conception d'escaliers intérieurs et extérieurs, balustrade de balcon, balustrade de pont sans cadre en verre, conception de balcon Juliette, escalier flottant
Inspection d'usine	Disponible

Diamètre 50mm Verre Standoff / Bouton dans **Finition Miroir**:

Avec vis à bois pour montage sur substrat en bois:

Dessin technique:

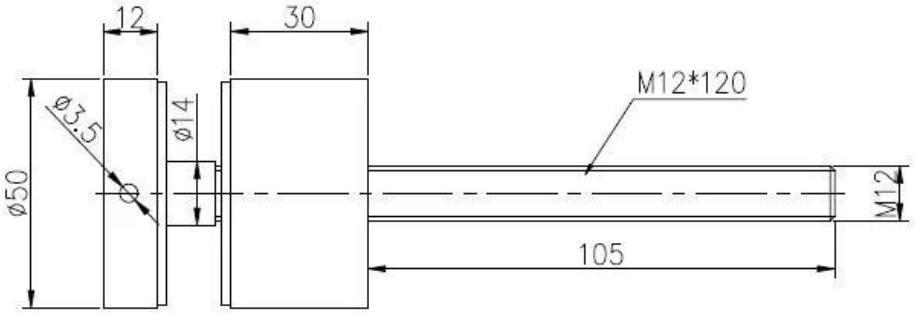

Salesman		Project name	

深圳市朝驰商贸有限公司 SHENZHEN LAUNCH CO.,LTD.			
Design	Jacky	Drawing NO:	
Check			
Craft		Name:Standoff	
Audit			Revision
Approve			V001

Quantity	Total	Page

Surface treatment		Propotion
Material	SS 316	1:1
No note of outity size tolerance		
Linear tolerance	X.	±0.1
	X.X	±0.1
	X.XX	±0.1
Angle tolerance	X.	±1°
	X.X	±0.5°

A4

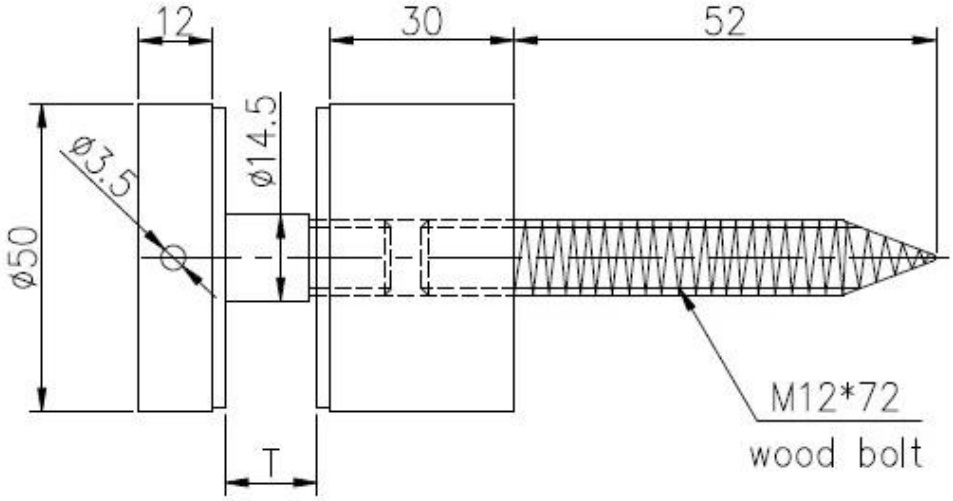

			深圳市朗驰商贸有限公司 SHENZHEN LAUNCH CO.,LTD.				Surface treatment		Propot
			Design	Jacky	Drawing NO:SF-50		Material		1:1
			Check				No note of entity size tolerance		
			Craft		Name:Standoff		Linear tolerance	X.	±0.1
Quantity	Total	Page	Audit			Revision		X.X	±0.1
								X.XX	±0.1
			Approve			V001	Angle tolerance	X.	±1°
								X.X	±0.5°

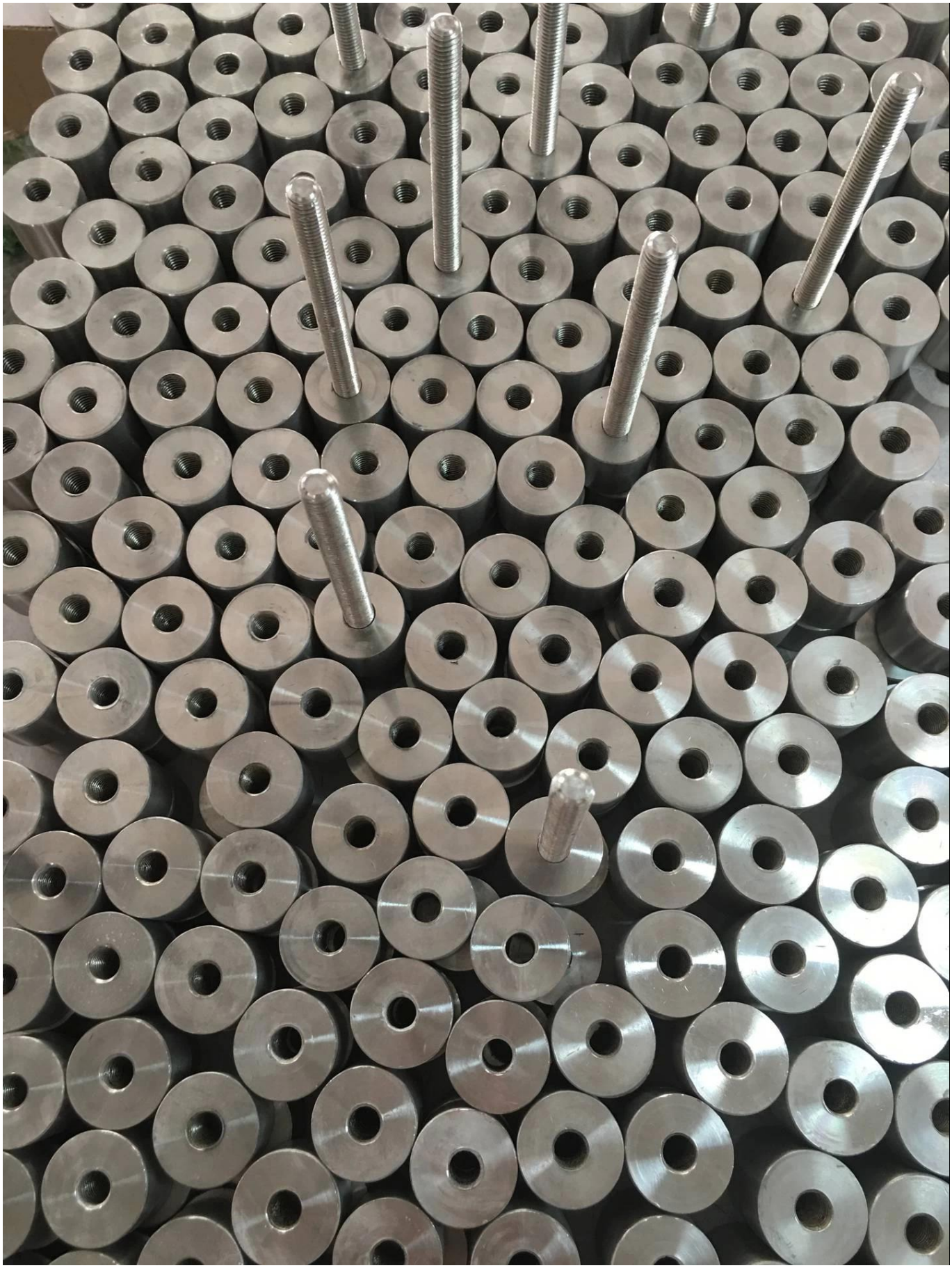

Photos du projet:

Système de balustrade à boutons en verre Balustrade en acier inoxydable

Socle en verre en acier inoxydable pour balustrade en verre sans cadre

entretoise en acier inoxydable, support pour conception de rampe d'escalier

Information d'entreprise:

Shenzhen Launch Co., Ltd was established in 2004, located at Nanshan District, Shenzhen, and one hour by car from Hongkong International Airport. Our main product is high-grade building materials includes stainless steel balustrade post, staircase handrail, balcony guardrail, swimming pool fence and other high-grade building materials. All the products are designed strictly according to the high-end market requirements. We have our own factory in Tangxia Town, Dongguan, has a variety of precision equipment more than 50 sets: CNC lathe, milling machine, punching machine, pipe cutter, argon welder, drilling machine, polisher, etc. which can provide customers with complete product processing services. With the German SPECTRO Spectrometer, we insist on testing every batch of materials to ensure that the material is highly qualified. We also have hardness gauge, secondary element and other test equipment to ensure the products meets customers' requirements.

ABOUT US

OUR ADVANTAGE

Please do not hesitate to contact us if you have any requirement regarding our production lines, you can expect a timely reply with professional solutions!

Own factory, shortest lead time.

Can help customers design product drawings based on customer ideas and design engineering installation drawing according to the customer site sketch.

Sample order, trial order acceptable.

Provide material test report to ensure that the material is qualified.

13 years of industry experience, we can help customers recommend the best solution to help customers save cost.

OUR FACTORY

More than 13 years experience in hardware industry design and processing, we can provide customized services from design to the sample and small batch trial production.

OUR CERTIFICATE

With premium quality, competitive price and superior service, we won a lot of customers' favor.
Our products are popular in North America, European and Australia.

PRODUCTION PROCESS

Casting

CNC lathe

CNC Milling

Stamping

Drilling & Tapping

Polishing

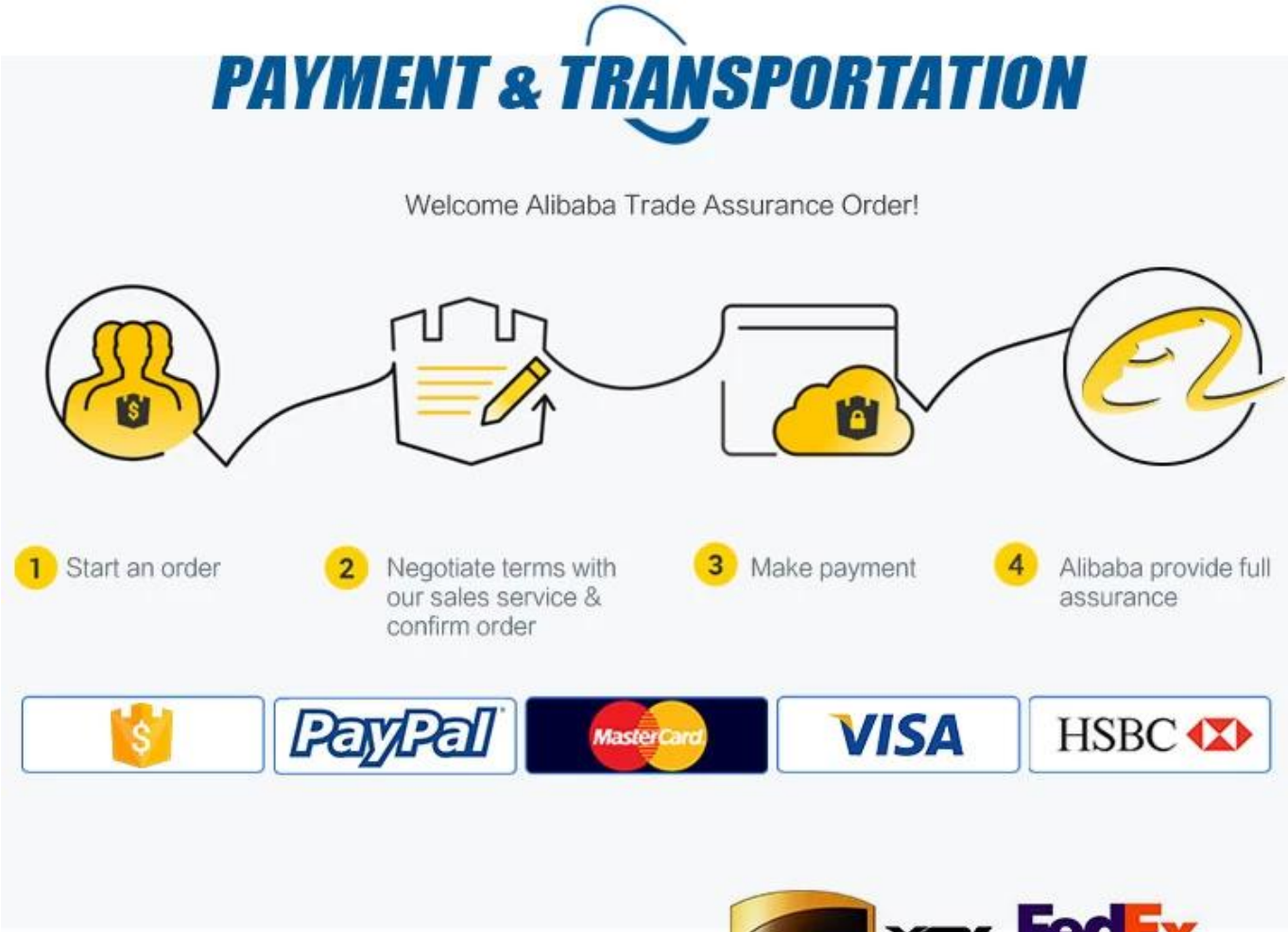

Contactez-nous maintenant pour plus d'informations!
Email: sales03@launch-china.cn

Mob: +8615907334556