Garde-corps en verre sans cadre pour balcon 50mm diamètre verre impasse des boulons mur monter , ininterrompu vues!

La balustrade en verre est composée de boulons en acier inoxydable, de panneaux en verre trempé (verre trempé clair de 10 à 19 mm d'épaisseur ou verre trempé ultra-clair), mains courantes en option.

Caractéristiques des verrous de verre -

- Modèle no. SF-50
- Matériau: acier inoxydable 304/316
- brossé ou poli
- Capuchon 50 * 12mm, corps 50 * 30mm, boulon M12 * 120
- fabriqué par usinage cnc
- boulons solides
- poids 715g
- d'autres diamètres de boulons d'écartement sont également disponibles: 30mm, 38mm, 40mm, etc.

photos de verrous de verre pour balustrades de verre sans cadre de balcon -

KEBIL科比奥®

KEBIL科比奥®

KEBIL科比奥®

SF-50

dessin de boulons en verre sans cadre

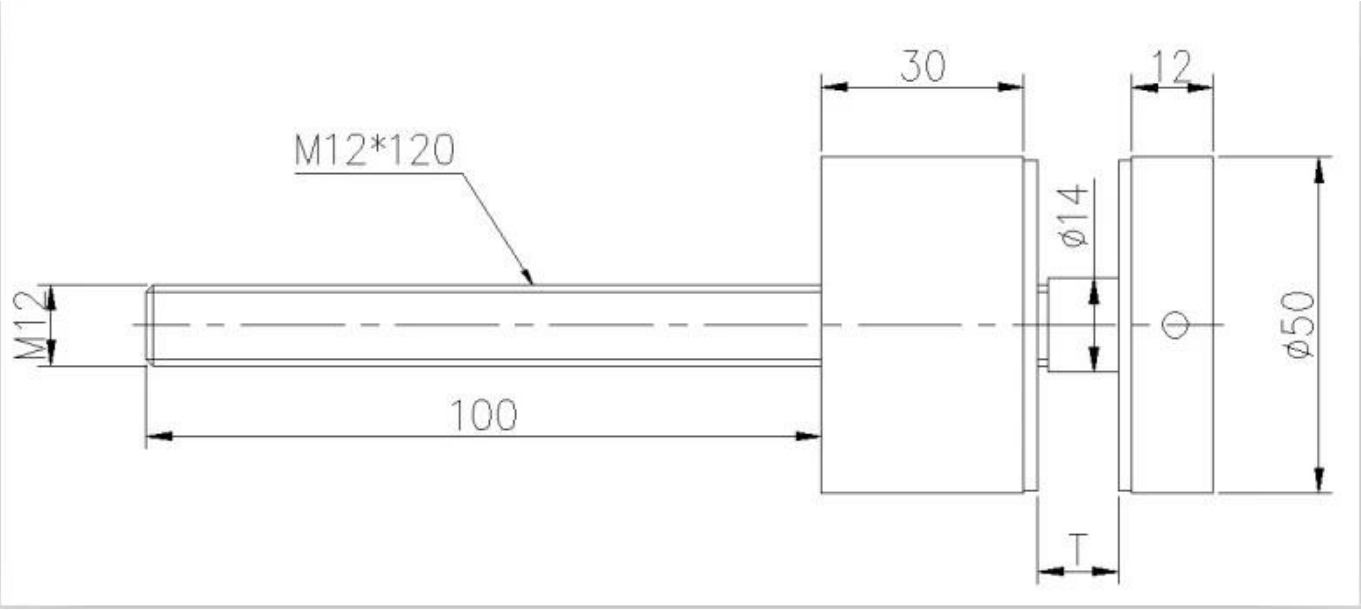

Emballage des photos de verre sans cadre impasse -

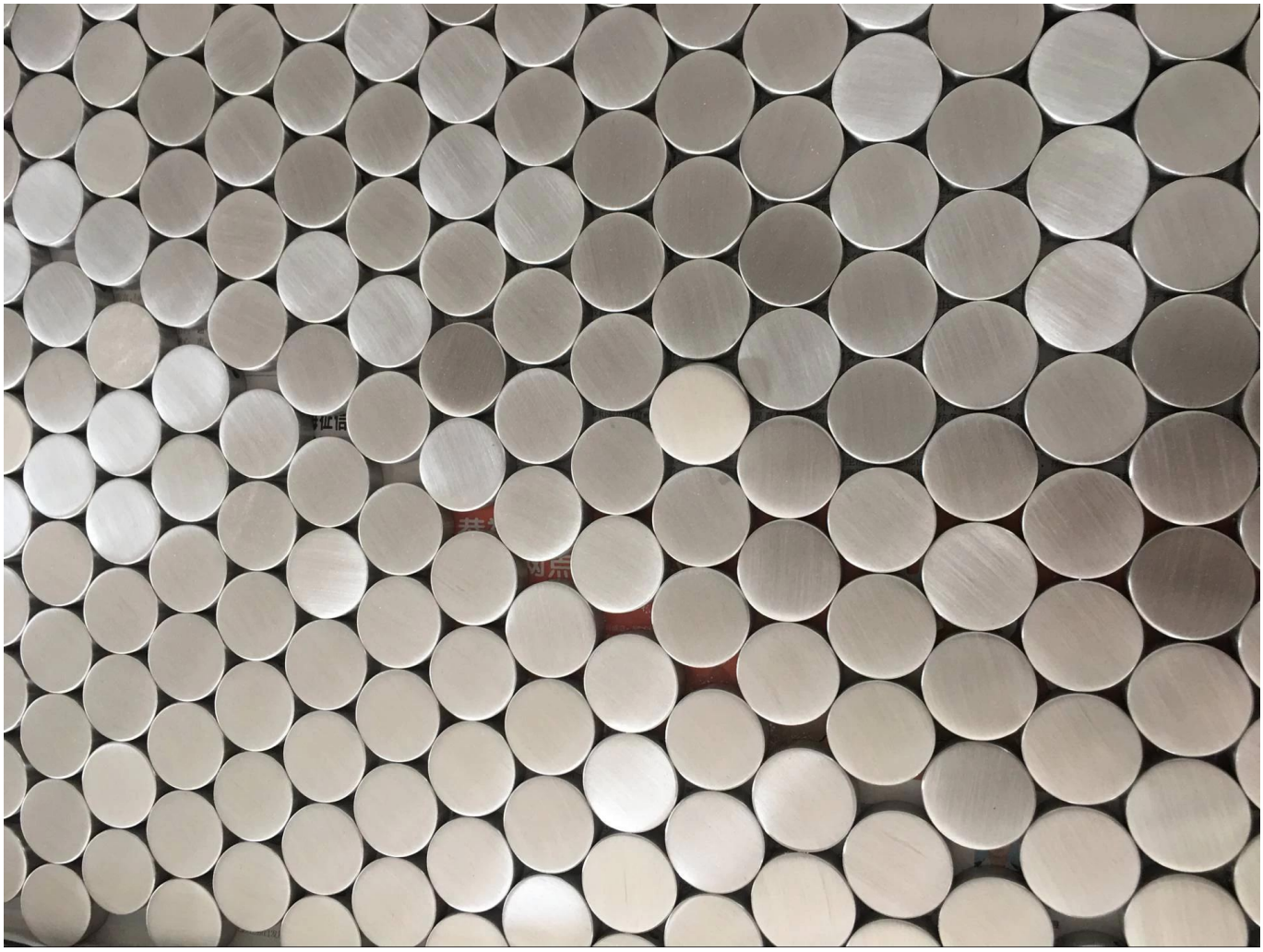

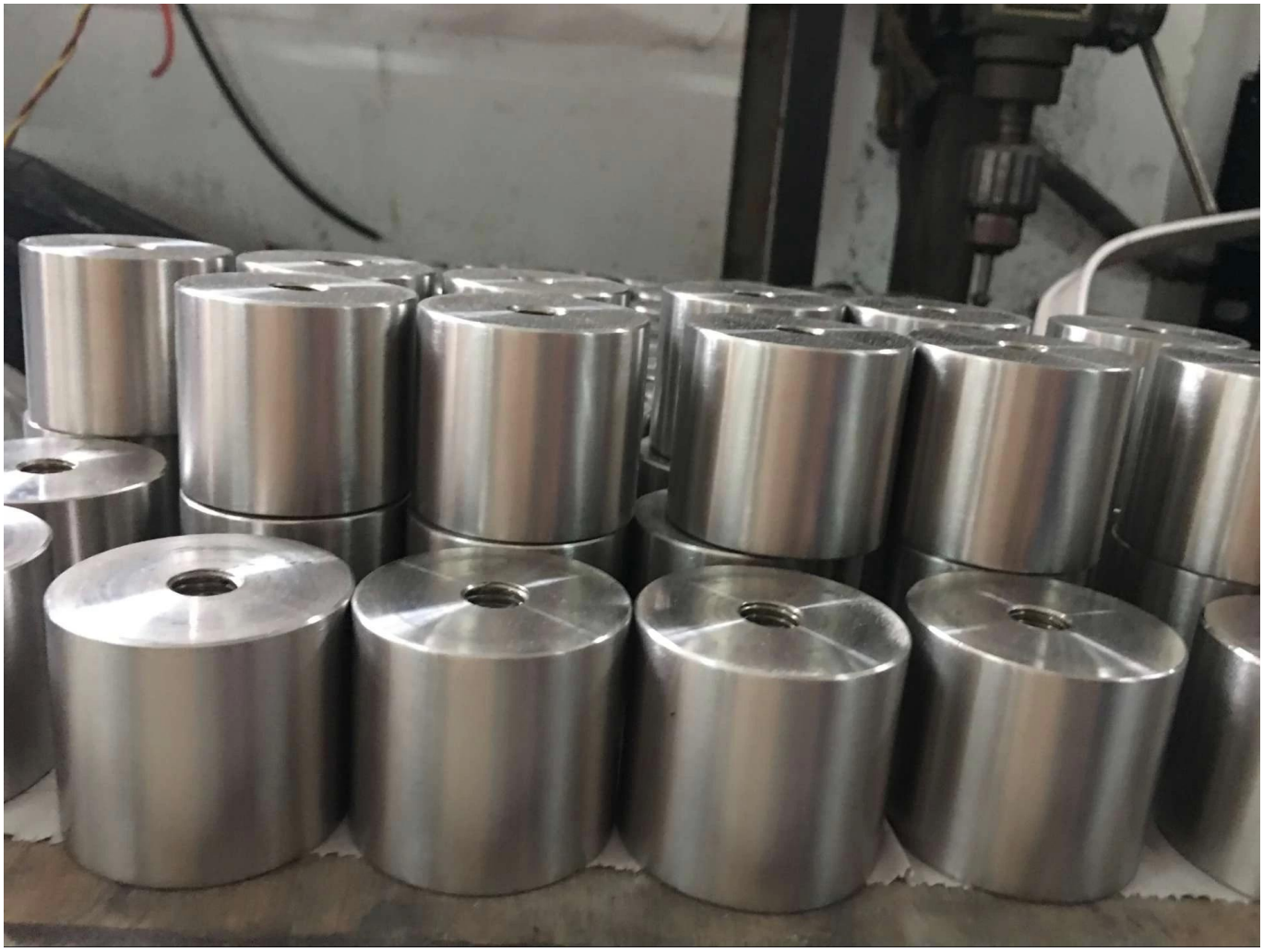

Photos de projet de balustrades en verre sans cadre avec nos boulons d’écartement en verre-

En savoir plus sur SHENZHEN LAUNCH CO. LTD-

Company profile

Shenzhen Launch Co., Ltd was founded in the year 2004, with full experience in below production lines:

1. Construction materials including stainless steel railing materials ,
handrail fittings ,clamps, brackets, flanges , stainless steel tubing /sheet etc.

2. Professional OEM services such as laser cutting, precision casting
(Stainless steel and Titanium), metal punch, cold rolling precision tube
(tolerance for inner and outer diameter can be controlled within plus/minus0.01mm), CNC machining, Al, Zinc alloy
die casting, hardware welding, tube bending, water heater accessories, solar energy equipment accessories, auto parts, etc.

We have been supplying middle and high end construction materials / OEM fabrication parts to our main market in Europe , North America , Oceania , for more than 15 years . Recent years we have also been supplying our materials to Middle East , South America .

Laser cutting workshop

CNC machine workshop

Sheet metal & bending machine workshop

Stamping shop

160T 宽台面冲床 模具加工尺寸800*1800mm

Die making shop

Sample Show room

Project reference-
Hot dip galvanizing parts for USA

Welding handrails for Australia

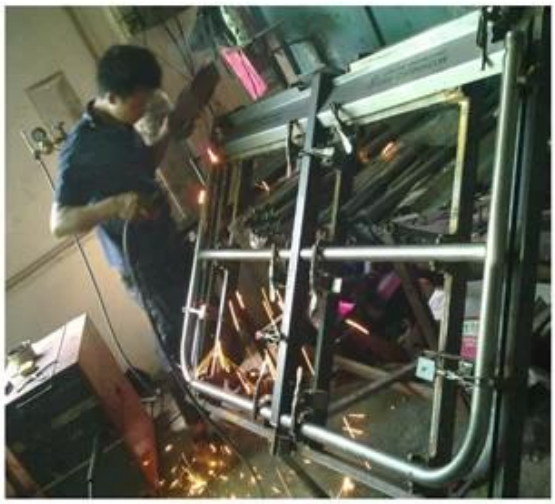

SS Front panel project for building in Australia

SS sheet panels

Steel tubing for USA

SS HANDRAIL FOR CANADA

Office address: B5-003, 5/F-Block 3, Yilida Building, No. 1092 Nanshan Road, Nanshan District,Shenzhen , China , postal code 518054

Tel: 86-755-86037559 Fax:86-755-86372611

Factory address in Dongguan : 1st floor , Building A , Ruixin Hengye No.3 industrial area, Taixing Road, Shigu Town,Tangxia district , Dongguan

Contacts:

Gao Binfeng –Managing director E. admin@launch-china.cn PH. 86-755-86037559

Celia Chen – Sales manager E. sales01@launch-china.cn PH. 86-755-86037559 MOB .+8613590273543

Jacky Pei – Chief Engineer PH . 86-755-86037559