Το Shenzhen Launch ιδρύθηκε το 2004 και είμαστε προμηθευτής χρυσού SGS για 16 χρόνια. Είμαστε αξιόπιστοι κατασκευαστές και προμηθευτές.

COMPANY INTRODUCTION

Verification Type: Supplier Assessment Onsite Check

Country / Region: Guangdong, China ✓

Year Established: 2004 ✓

Main Products: CNC Machining Parts,Stamping Pa... ✓

Main Markets: North America, Oceania, Mid East,... ✓

Total Annual Revenue: confidential ✓

Total Employees: 11 - 50 People ✓

Alibaba.com Gold Plus Supplier

Main Product Lines Verification Report

Presented to

Shenzhen Launch Co., Ltd.

深圳市朗驰商贸有限公司

Company Address	B5003, Building 3, Yilida Building, No. 1092 Nanshan Avenue, Dengliang Community, Nanshan Street, Nanshan District, Shenzhen City, Guangdong Province, China
Consigner of Assessment:	Alibaba
Gold Supplier Member ID:	launch168
Gold Supplier Company Name:	Shenzhen Launch Co., Ltd.
Contact Person:	Mr. Binfeng Gao
Phone Number:	0086-13802569770
Fax Number:	0086-755-86372611
Email:	gbf999@china.com
Website Address (URL):	http://launch-china.en.alibaba.com

Service Provided by SGS
Report No.: 19536352_P+T

Alibaba.com Global trade starts here. SGS

Alibaba.com Gold Plus Supplier

Verified

Assessment Report

Presented to

Cooperation Company of Shenzhen Launch Co., Ltd.

深圳市朗驰商贸有限公司合作工厂

Gold Supplier & Assessed Company Relationship:	☐ Self-owned ☐ Wholly Owned ☐ Shareholder/Partner ☐ Kindred between Owners ☒ Cooperation Partner
Company Address	Confidential
City / Country:	Huizhou / China
Consigner of Assessment:	Alibaba & Shenzhen Launch Co., Ltd.
Gold Supplier Member ID:	launch168
Gold Supplier Company Name:	Shenzhen Launch Co., Ltd.
Contact Person:	Confidential
Phone Number:	Confidential
Fax Number:	Confidential
Email:	Confidential
Website Address (URL):	http://launch-china.en.alibaba.com

Service Provided by SGS
Report No.: 19552720_P

Alibaba.com Global trade starts here. SGS

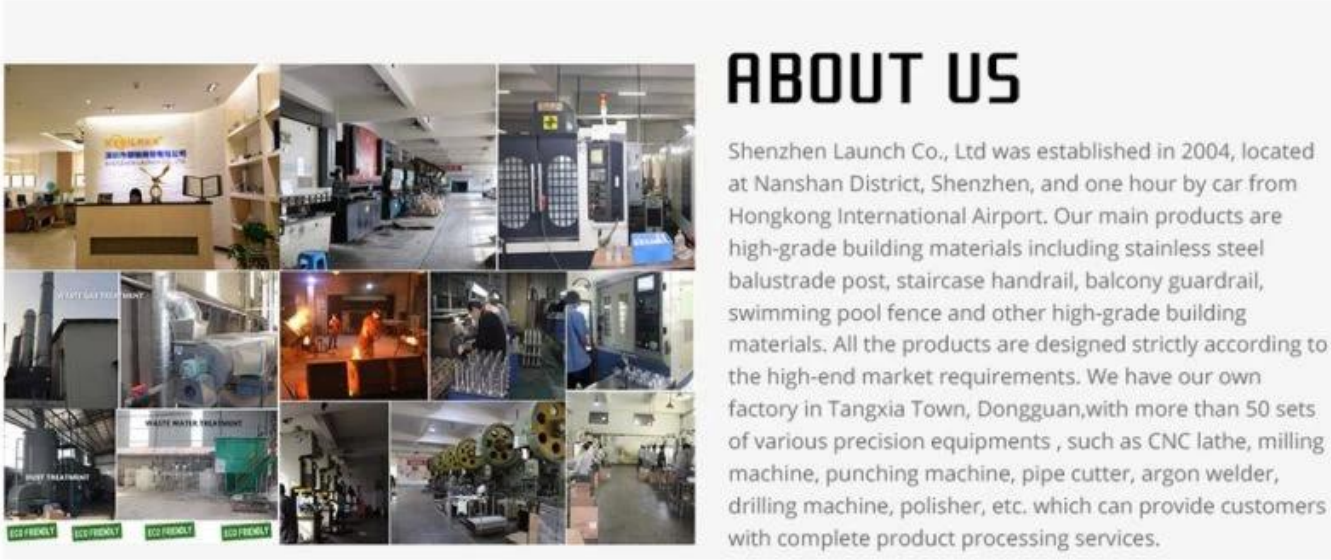

Προδιαγραφές προϊόντος

Ονομασία προϊόντος	Ανοξείδωτο ατσάλι
Υλικό	304SS / 316SS
Φινίρισμα επιφάνειας	Σατέν / Καθρέφτης / Άλλα
Μέγεθος σώματος	Dia.50 * 30mm / 50 * 50mm
Μέγεθος καπακιού	Dia.50 * 12mm
Μέγεθος μπουλονιού	M12 * 72 / M12 * 100 mm

Εκθεση Προϊόντος

KEBIL科比奥®

ΤεχνικόςΣχέδιο

Glass standoff connect with wood

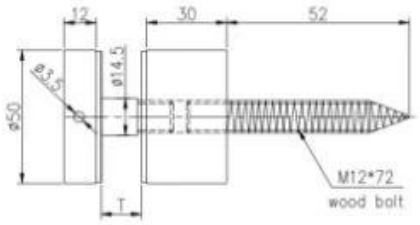

Glass standoff connect with concrete

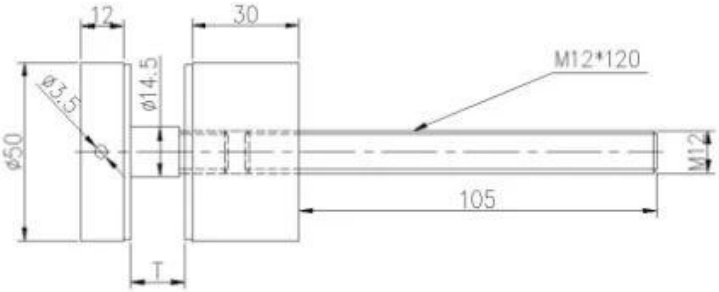

Άλλες προδιαγραφές standoff

STAND OFF

Part No.	Material	Finish	Body	Bolt size
▪ SF-30 ▪ SF-40 ▪ SF-50 ▪ SF-50A	▪ AISI 304 ▪ AISI 316	▪ Satin ▪ Mirror	▪ 30x10; 30x25mm ▪ 40x10; 40x30mm ▪ 50x12; 50x30mm ▪ 50x12; 50x50mm ▪ silicon rubber gasket included	▪ M10x120 bolt ▪ M10x72 wood screw ▪ M8x100 bolt ▪ M8 x72 wood screw

Part No.	Material	Finish	Body	Bolt size
▪ SF-38Z	▪ AISI 304 ▪ AISI 316	▪ Satin ▪ Mirror	▪ hollow type ▪ 38x7.5;38x38mm ▪ silicon rubber gasket included	▪ M8x70 hexagonal screw

Part No.	Material	Finish	Body	Mounting plate size
▪ SF-50T	▪ AISI 304 ▪ AISI 316	▪ Satin ▪ Mirror	▪ 50x10;50x30mm ▪ silicon rubber gasket included	▪ 200x100x10mm

SF-50T

SF-50A

SF-50

SF-38

SF-38Z

SF-30

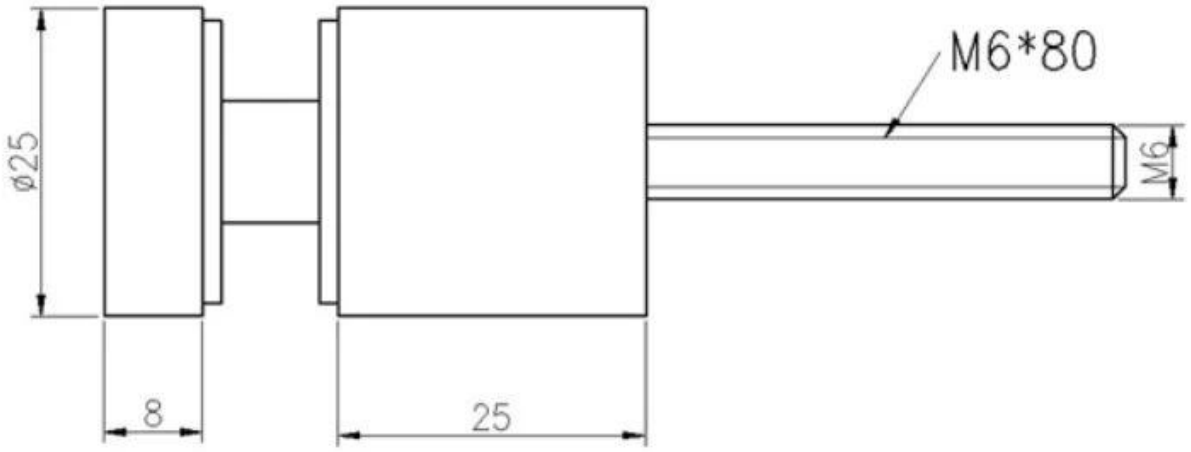

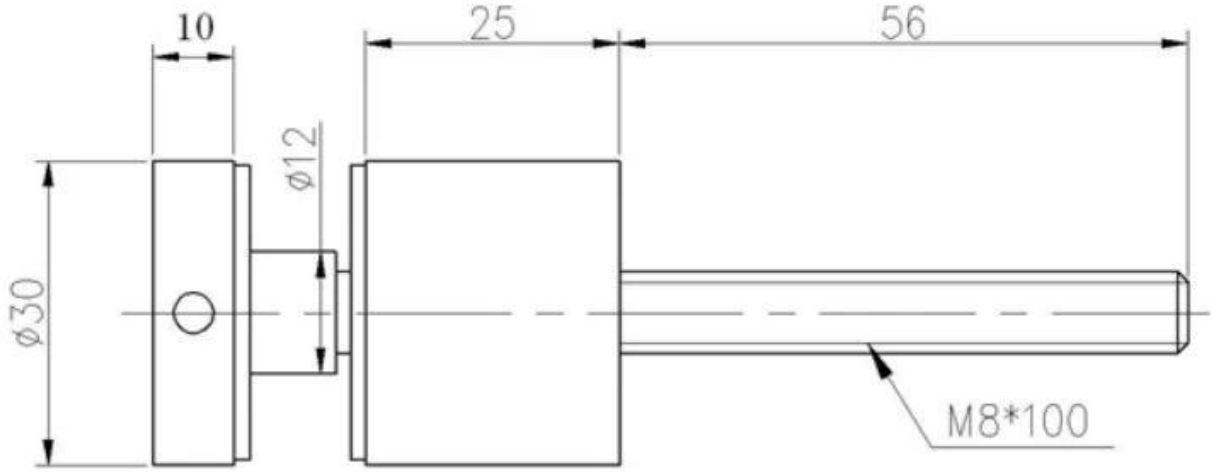

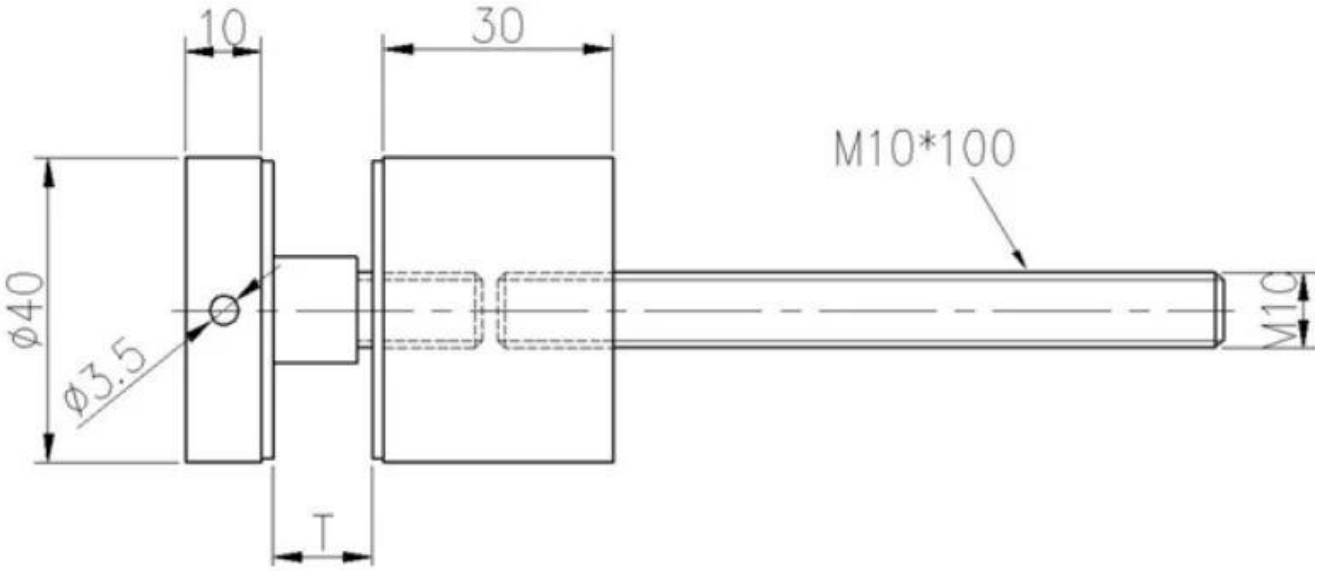

ΜάζαΠαραγωγή

Εικόνες συσκευασίας

Standoff Glass Blaustrade

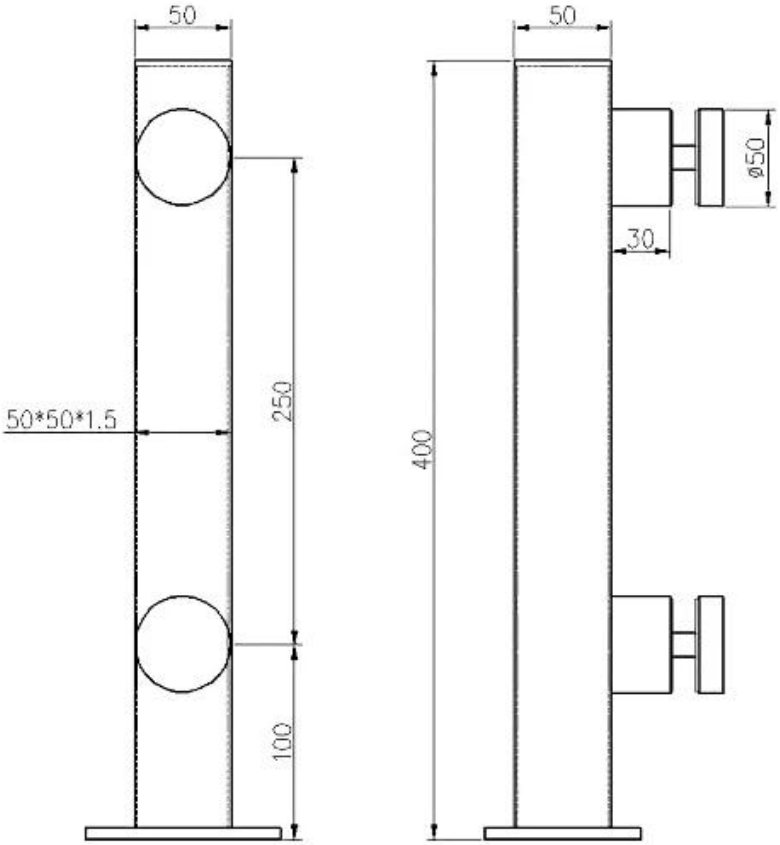

Εικόνες εφαρμογής

Εάν έχετε οποιεσδήποτε ανάγκες, μη διστάσετε να επικοινωνήσετε μαζί μας.

Φρανκ Φανγκ

Email: sales02@launch-china.cn

Τηλέφωνο / WhatsApp / Wechat: +8615906261741