Tendicatena hardware in acciaio inox 316 per cavi da 3-5 mm, tendicatena senza fili, senza necessità di crimpatrici idrauliche.

Feautures-

Articolo	hardware della ringhiera del cavo, tendicatena
Diametro del cavo	3mm 4mm 5mm
Applicazione	palo in acciaio / palo in legno
genere	swageless
Materiale	316 acciaio inossidabile / 304SS
MOQ	50 coppie

Foto del tenditore del cavo T803 -

Tendicatena T803 con vite / vite per legno

T803

T803 Specifiche del disegno del tenditore del cavo.

Model: T803

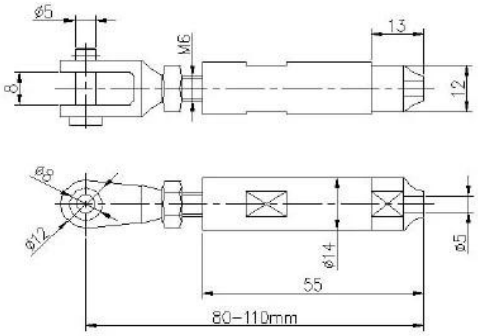

SWAGELESS TYPE CABLE TENSIONER

Abbiamo anche altri tipi di tendicatena per la vostra selezione -
Tendicatena T804, per cavi 4-5mm

Tensionatore del cavo T807A, principalmente per cavi di piccolo diametro da 3 mm

Foto del progetto di ringhiere per cavi con tendicatena -

Project Photos

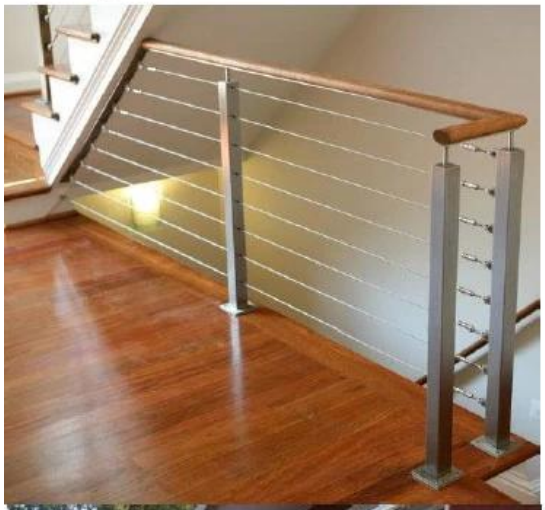

Profilo Aziendale-

Shenzhen Launch Co., Ltd was established in 2004, located at Nanshan District, Shenzhen, and one hour by car from Hongkong International Airport. Our main product is high-grade building materials includes stainless steel balustrade post, staircase handrail, balcony guardrail, swimming pool fence and other high-grade building materials. All the products are designed strictly according to the high-end market requirements. We have our own factory in Tangxia Town, Dongguan, has a variety of precision equipment more than 50 sets: CNC lathe, milling machine, punching machine, pipe cutter, argon welder, drilling machine, polisher, etc. which can provide customers with complete product processing services. With the German SPECTRO Spectrometer, we insist on testing every batch of materials to ensure that the material is highly qualified. We also have hardness gauge, secondary element and other test equipment to ensure the products meets customers' requirements.

ABOUT US

OUR ADVANTAGE

Please do not hesitate to contact us if you have any requirement regarding our production lines, you can expect a timely reply with professional solutions!

Own factory, shortest lead time.

Can help customers design product drawings based on customer ideas and design engineering installation drawing according to the customer site sketch.

Sample order, trial order acceptable.

Provide material test report to ensure that the material is qualified.

13 years of industry experience, we can help customers recommend the best solution to help customers save cost.

OUR FACTORY

More than 13 years experience in hardware industry design and processing, we can provide customized services from design to the sample and small batch trial production.

OUR CERTIFICATE

With premium quality, competitive price and superior service, we won a lot of customers' favor.
Our products are popular in North America, European and Australia.

PRODUCTION PROCESS

Casting

CNC lathe

CNC Milling

Stamping

Drilling & Tapping

Polishing

PACKAGING & DELIVERY