Disegni in cina fabbricazione in acciaio inox

1.	Materiale e finitura	304/316 acciaio inossidabile; Finitura satinata o specchio
2.	Altezza	1000mm / dimensioni personalizzate
3.	Stucheon Post.	D50.8 * 1,5 (mm) tubo; Staffa ferroviaria superiore regolabile a 4 vie; Morsetto di vetro quadrato o rotondo.
4.	Top Rail.	D50.8 * 1,5 (mm) Tubo del cavo
5.	Ringhiera di sicurezza	Pannello in vetro temperato trasparente da 10 mm / 12mm
6.	Vedi Posizione	Balauster, Balaustra, Banister, recinzione, corrimano, ringhiere; Balcone, Ponte, Ponte, Giardino, Patio, Piscina, Portico, Scala, Terrazza
7.	Installazione	Top / lato montato
8.	Pacchetto	EPE + scatola interna + cartone

ProdottoMostrare

TecnicoDisegno

LCH-106

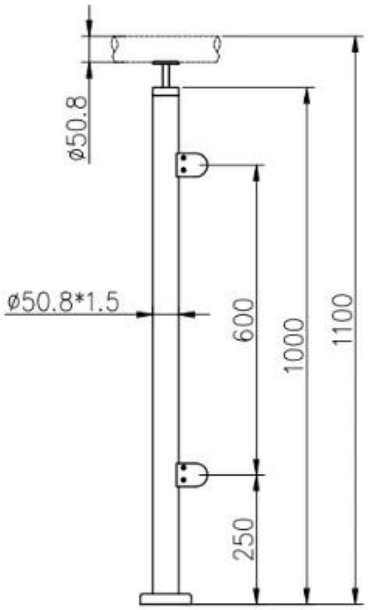

LCH-107

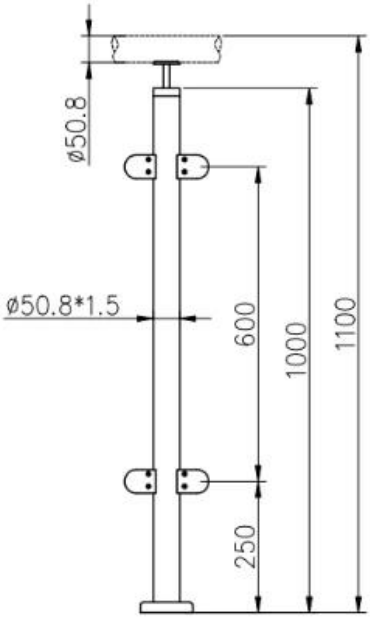

LCH-108

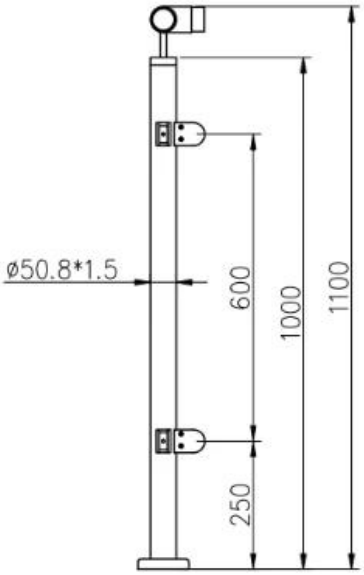

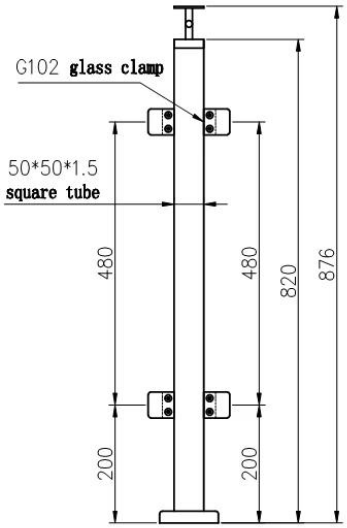

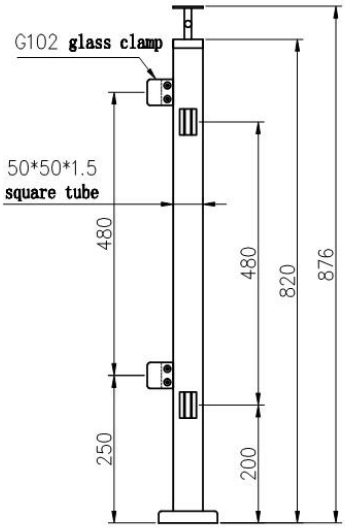

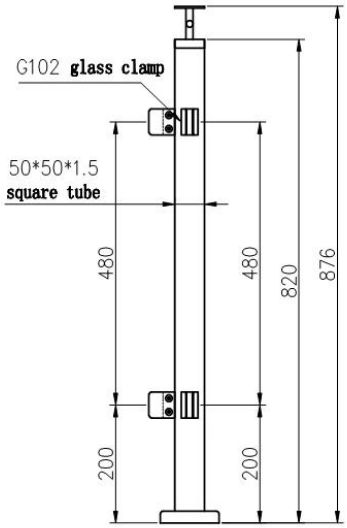

Installazione:

Glass Clamp Installation Guide

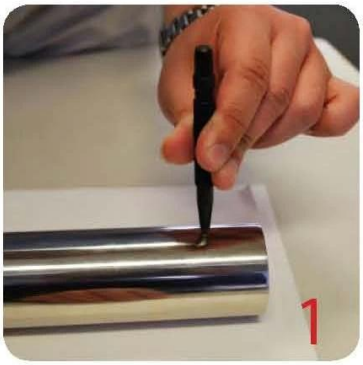

Mark and centre punch desired location of blind rivet nut location.

Drill centre punched hole in tube to suit blind rivet nut.

Insert blind rivet nut into tube and fasten with blind rivet tool.

Check installed blind rivet nut is secure and ready for install.

Align half glass clamp with blind rivet nut inline position. Screw in button head cap screw into thread and tighten with hex key.

Select appropriate rubber gasket to suit glass panel thickness. Install rubber gasket into both sides of glass clamp. (Note rubber gasket marked with sizes).

If heavier clamping load is required please use supplied glass clamp pin, during the install process. Note glass panels will require drilling in order to fit glass clamp pins.

Fit glass panel into position, install second half of glass clamp secure with provided hex screws.

Tighten glass clamps with hex key, and check glass panel are secure with no movement.

Progetto Mostra:

Disegni in cina fabbricazione in acciaio inox

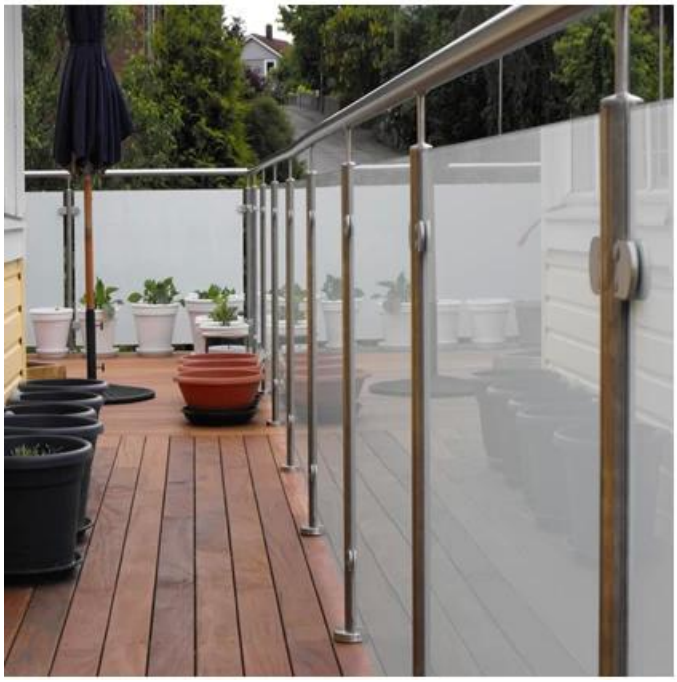

Benvenuto acontattami per ulteriori dettagli:
Wendy: sales04@launch-china.cn.
HP / Whatsapp / WeChat: +8615989339827