Duplex 2205 Brush Brushed Beaded Base Plate Plate Spigot per recinzione in vetro piscina senza telaio.

1. Caratteristiche -

Modello numero.	Rbm.
Materiale	Duplex 2205 Acciaio inossidabile
Fine	Raso spazzolato, specchio, nero, oro ecc.
Per spessore del vetro	10mm-13.52mm.
Altezza	168mm.
MOQ.	1 pc

2. Foto e dimensione-

KEBIL科比奥®

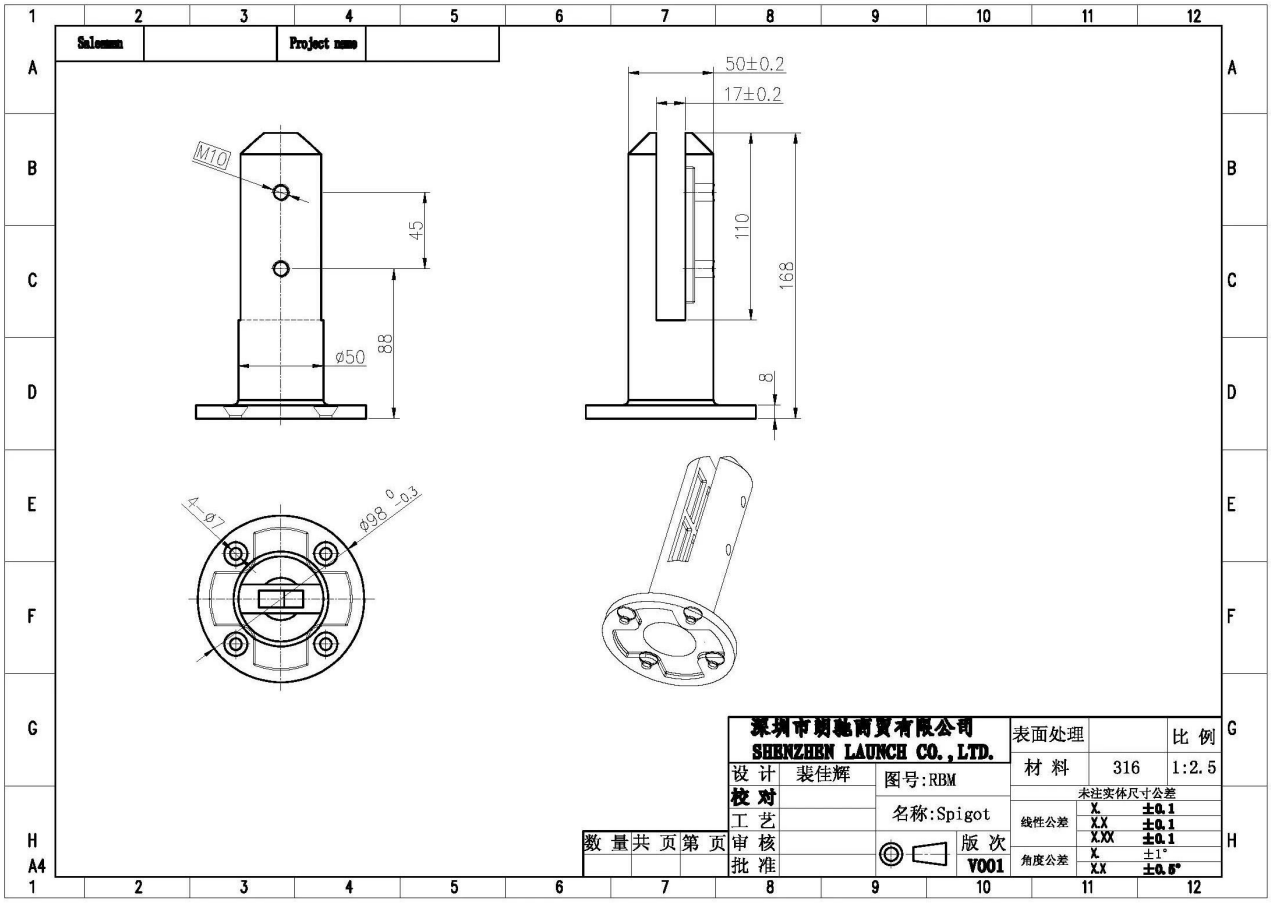

3. Guida all'installazione-

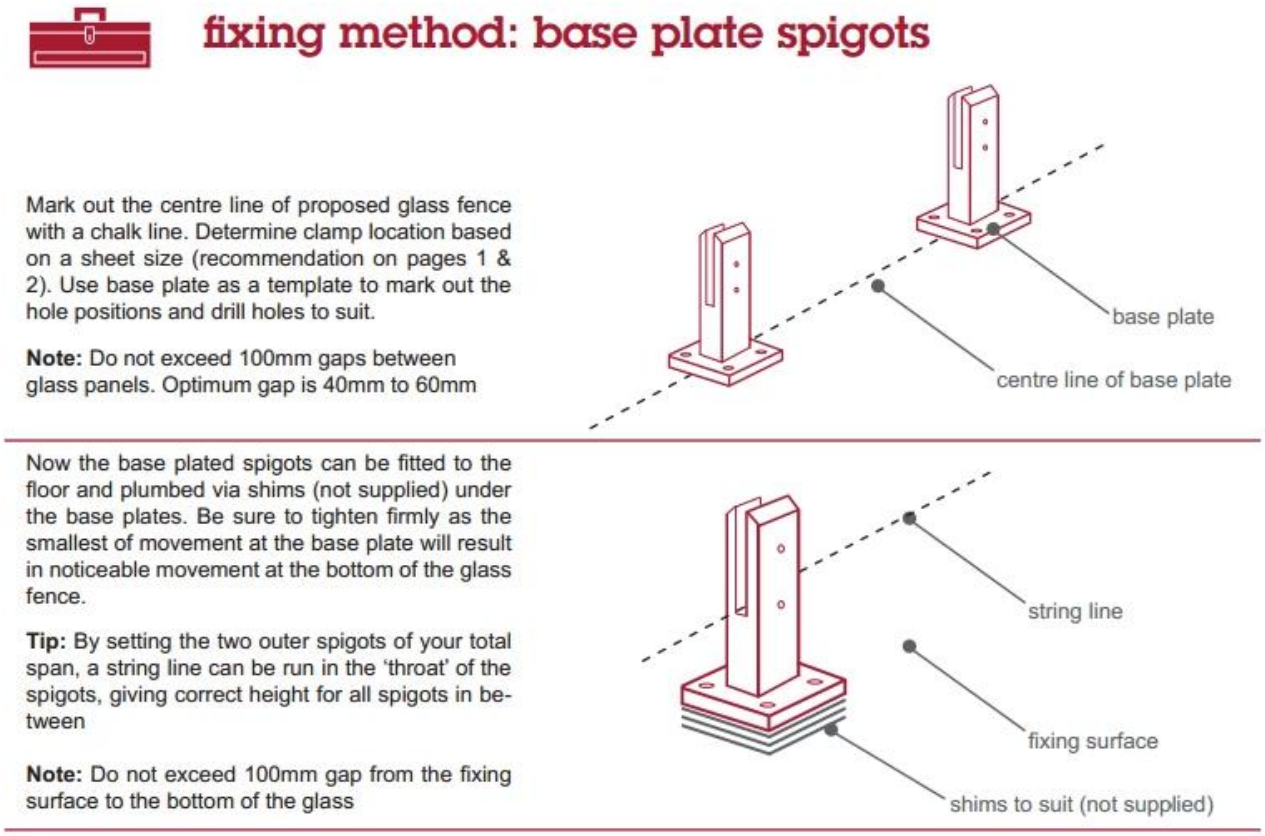

When all spigots are installed, slip domical cover the top of the spigot to hide fixings. It will be necessary to turn the adjustment screws on the spigot face all the way in to allow cover to pass over

Note: Same installation method applies to round base plate spigot

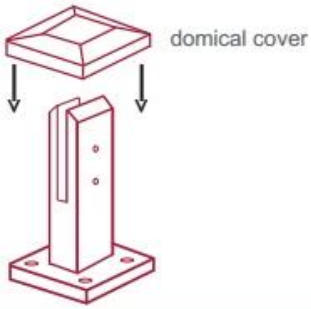

The glass is then installed to the spigots.
Place plastic packers between glass & spigot, at no stage should glass touch the metal

How adjustability works:

1. Place glass in spigot
2. Fix/ tension glass both sides with allen key

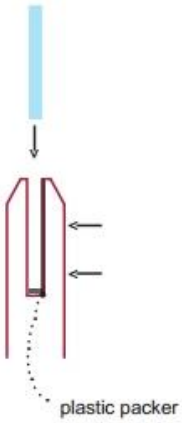
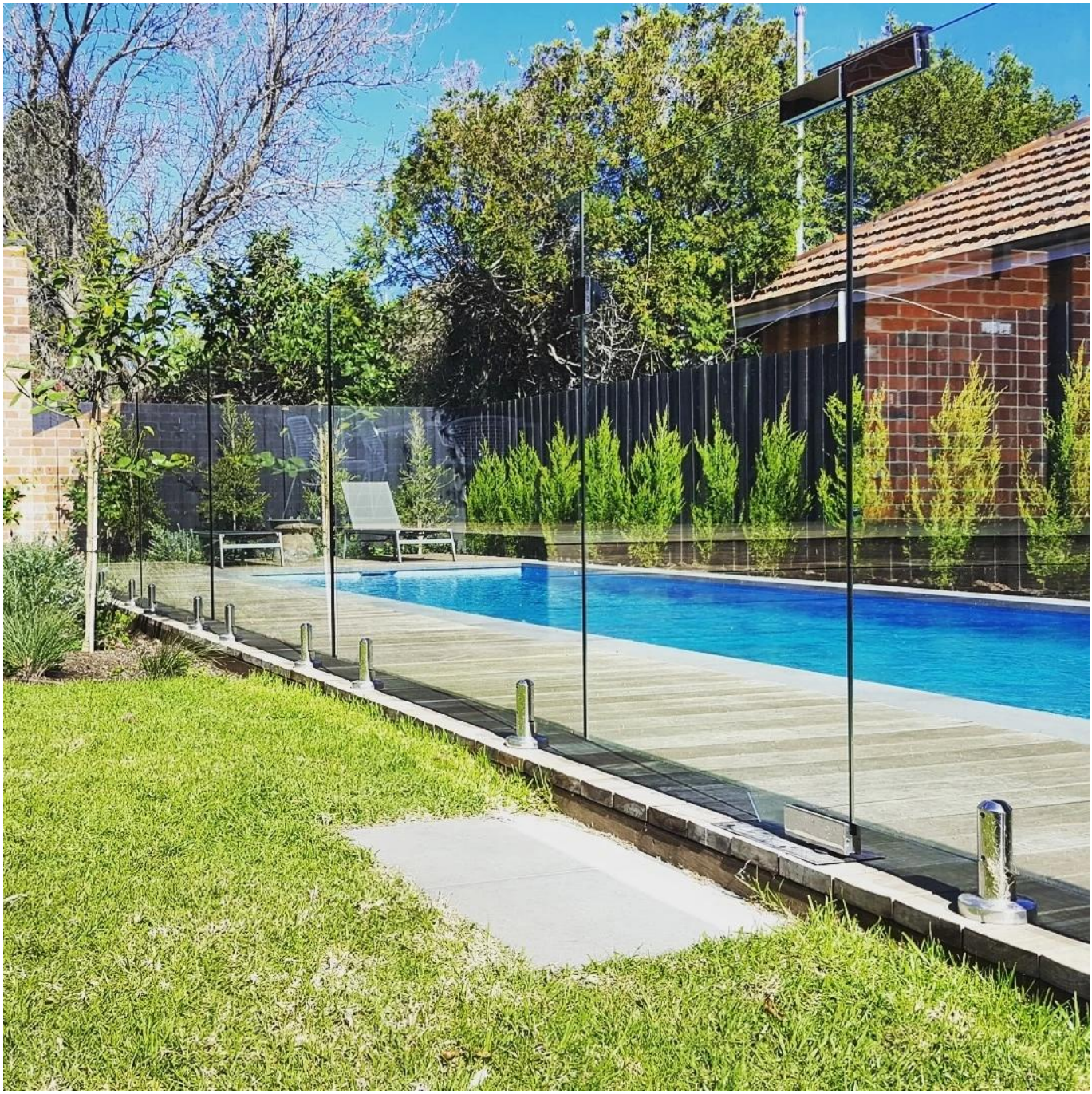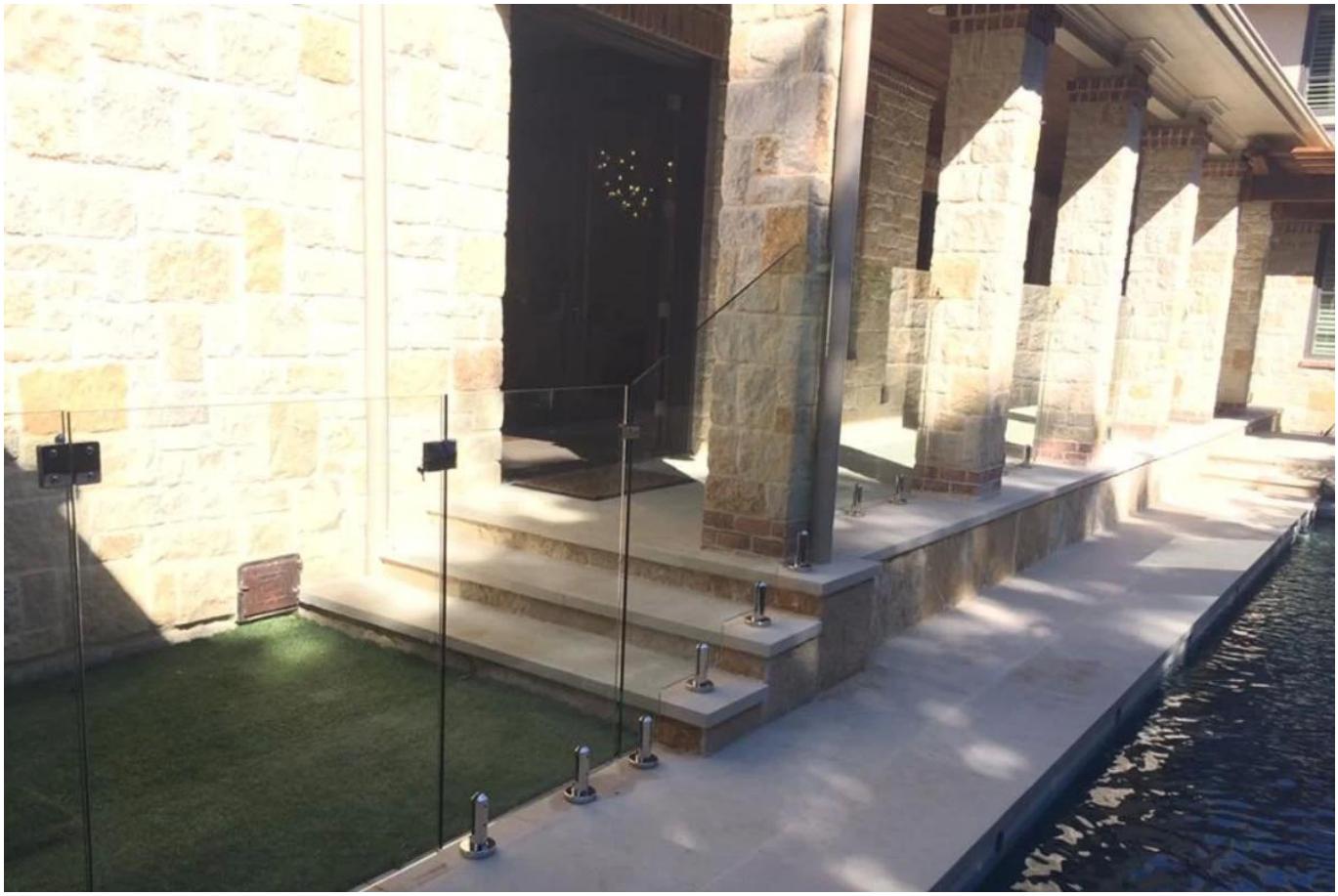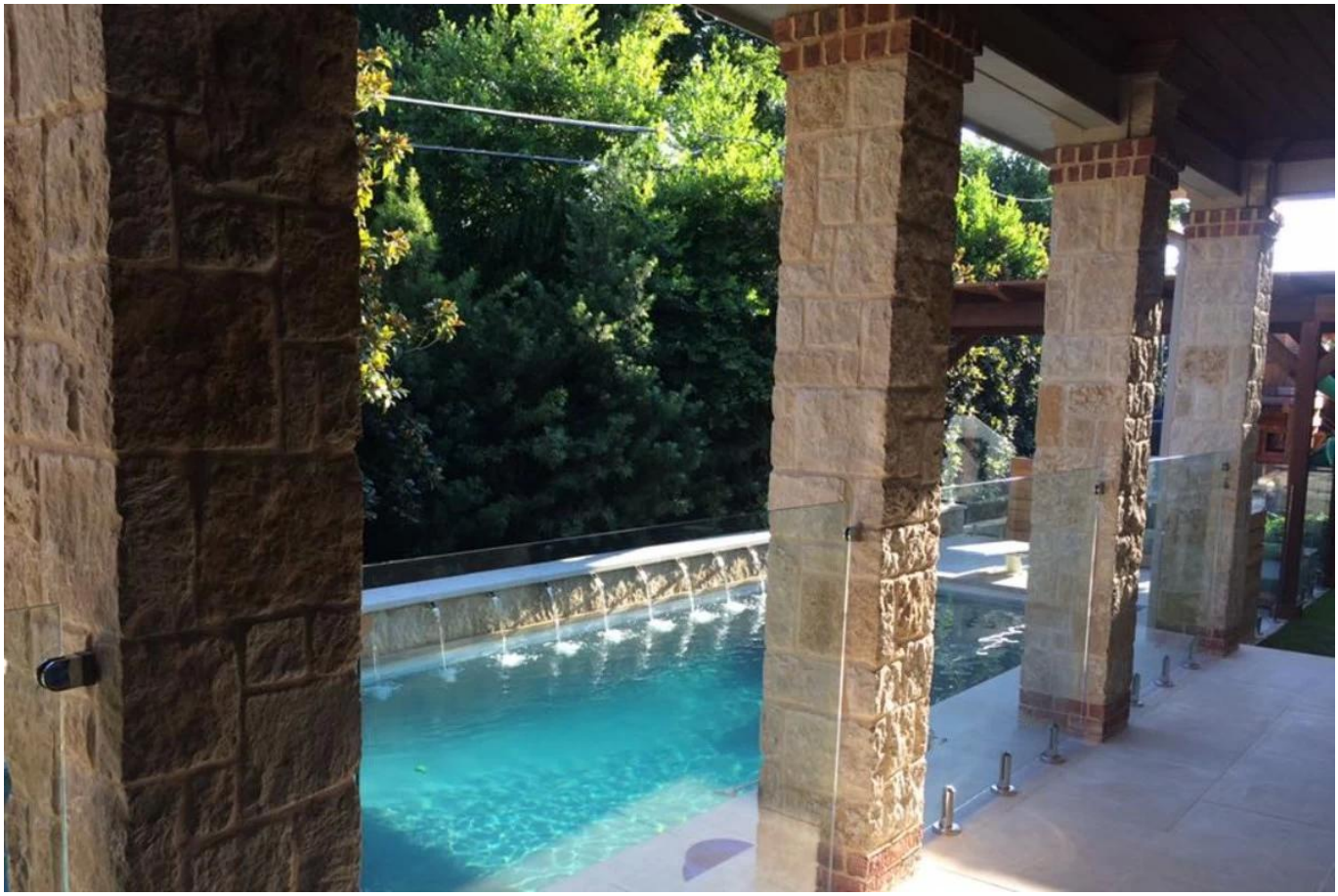
4. Ringhiere in vetro senza cornice con duplex 2205 PIASSONE ROUND ROUND PIASSA PIASSONE DI BASSO SPIGOT-