Ringhiere in vetro senza telaio con spigot in vetro duplex 2205 per pannelli in vetro da 10 mm a 13,52 mm.

Il nostro spigot in vetro duplex 2205 regolabile è con 4 piccoli fori e viti aggiuntivi sulla piastra di base e 1 piastra di livellamento per PC da utilizzare nella parte inferiore dello spigot per regolare il livello quando il terreno non è nemmeno.

1. Caratteristiche della ringhiera di vetro con spigot di vetro duplex 2205

Materialedispigot.principalecorpo	Duplex 2205.
Materiale per viti, coperchio di base, piastra di livellamento	316 acciaio inossidabile
finire	Rivestimento in polvere nero opaco o elettrolazzetto; raso; specchio
Spessore di vetro	Vetro di spessore 10-13,52mm.
Altezza	168 mm; o può essere personalizzato
Guarnizione di plastica	Realizzato in materiale nylon, può durare per il tempo per tutta la vita
Bullone di cemento per adattarsi	M8 * 100.
Peso unitario per PC	1.45kg.
In magazzino	sì
MOQ.	2 pezzi

2.DimensionidiSBM.bicchierespigot-

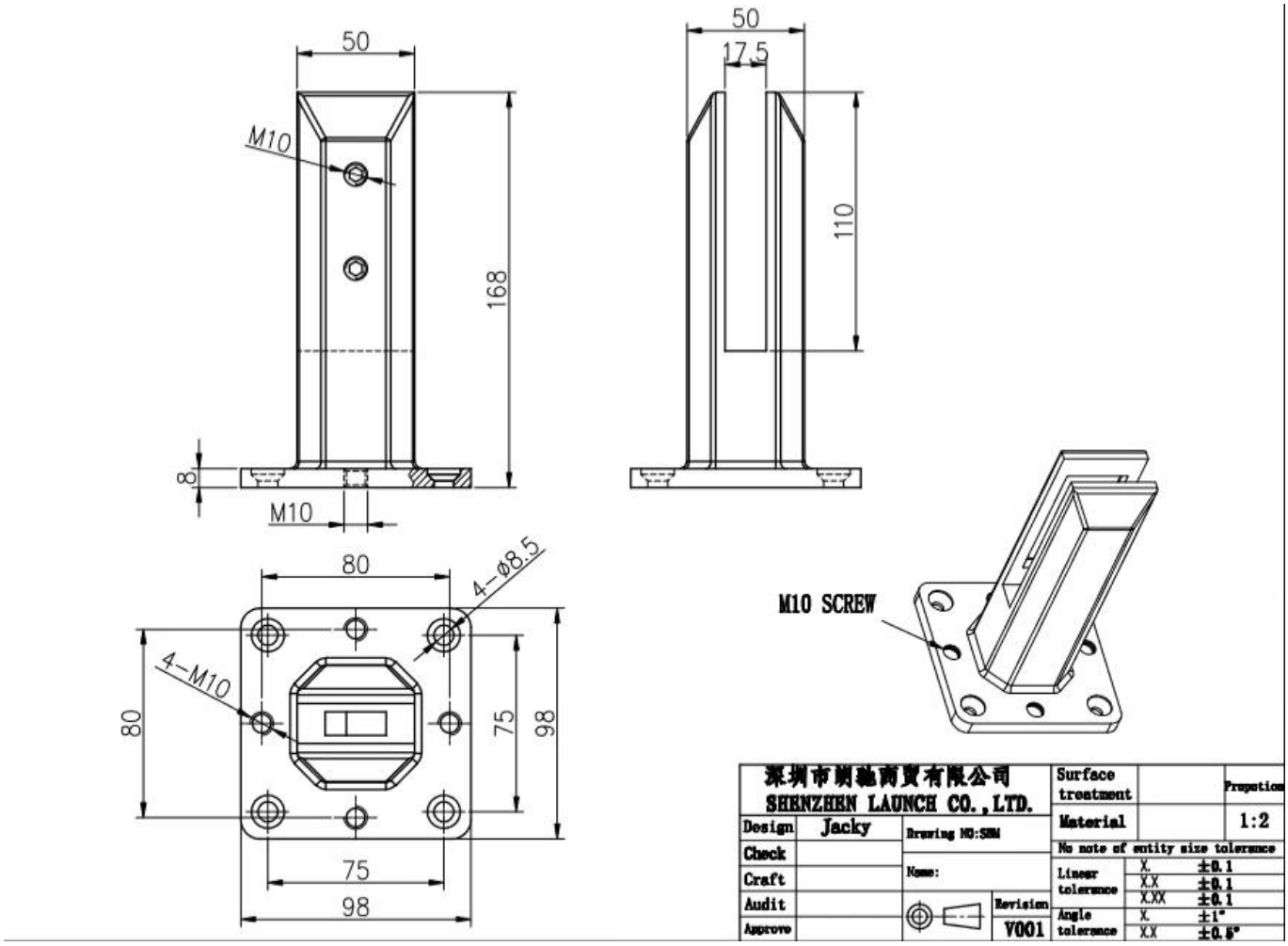

3.Caricamento in corsotest&MaterialetestperSBM Duplex 2205.bicchierespigot-

LOADING TEST FOR SBM

Introduction

MTS Metallurgical Testing Services was engaged to witness the installaton of a sample pool fence spigot and to subsequently conduct load tests on the spigot to the requirements of Australian Standard AS1926.1 - 2012.

Standard/Specification AS 1926.1 - 2012, Section 3.2 and Appendix B

Results Summary
(For details of individual tests, refer to the tables on the following pages.)

ID	Item/Heat No.	Dimensions/Type/Details	Finish	Overall Assessment
14117/01	SSBM316	50mm Square, Base Plate 316 Stainless steel	316l	COMPLIES

Remarks

After completion of the testing, the spigot was found to be in sound condition with no breakage, tearing or signs of fracture and no looseness of the fixings.

Colin Lorimer
Metallurgical Testing Manager

NATA
Accreditation No: 15624
Accredited for compliance with ISO/IEC 17025

Strength Test

Test Specification AS 1926.1 - 2012, Appendix B

Test Procedure MTS-TP3.1 Compression Tests - Products

Specimen ID	Observations	Assessment
14117/01	Test Equipment: Hydraulic ram and 10,000 N load cell Test Load: 330N Load Duration: 45 Secs Deflection under load: 1 mm Permanent Deflection after removal of test load: 0 mm	COMPLIES

Requirements No permanent damage or loosening of fixings.

SPECTRO

12/16/2020 5:54:18 PM

Method: Fe-30

12/16/2020 5:54:09 PM

Comment: Cr-, Cr/Ni-steel

Type corr.concentr.

Type Standard 18--8

Sample Name:

Sample ID:

	C	Si	Mn	P	S	Cr	Mo	Ni
	%	%	%	%	%	%	%	%
< x > (1)	0.0224	0.8873	1.1010	0.0263	0.0032	21.6796	3.0718	5.5691

	Al	Co	Cu	Nb	Ti	V	W	Pb
	%	%	%	%	%	%	%	%
< x > (1)	< 0.0005	0.0797	0.1603	< 0.0002	0.0044	0.0893	0.0305	< 0.0002

	Sn	Sb	B	N	Fe			
	%	%	%	%	%			
< x > (1)	0.0092	< 0.0004	0.0024	0.1024	67.1600			

4.InstallazioneIstruzioniperSBM.bicchierespigot-

fixing method: base plate spigots

Mark out the centre line of proposed glass fence with a chalk line. Determine clamp location based on a sheet size (recommendation on pages 1 & 2). Use base plate as a template to mark out the hole positions and drill holes to suit.

Note: Do not exceed 100mm gaps between glass panels. Optimum gap is 40mm to 60mm

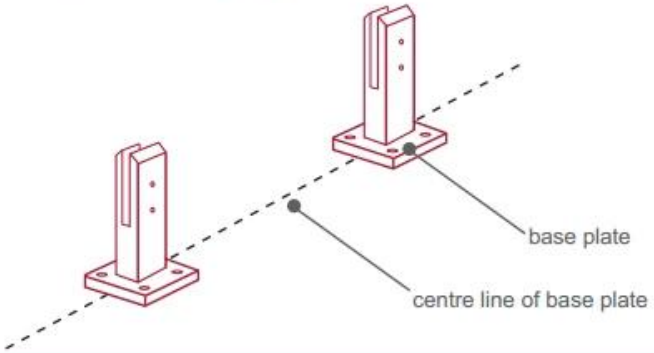

Now the base plated spigots can be fitted to the floor and plumbed via shims (not supplied) under the base plates. Be sure to tighten firmly as the smallest of movement at the base plate will result in noticeable movement at the bottom of the glass fence.

Tip: By setting the two outer spigots of your total span, a string line can be run in the 'throat' of the spigots, giving correct height for all spigots in between

Note: Do not exceed 100mm gap from the fixing surface to the bottom of the glass

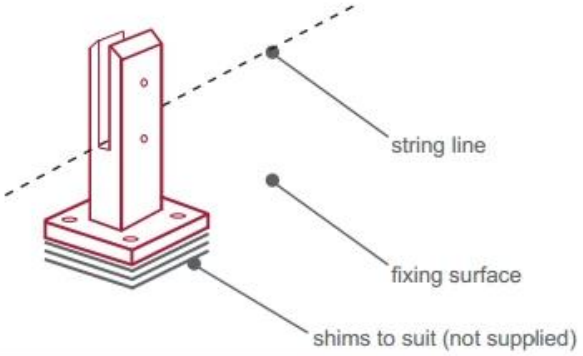

When all spigots are installed, slip domical cover the top of the spigot to hide fixings. It will be necessary to turn the adjustment screws on the spigot face all the way in to allow cover to pass over

Note: Same installation method applies to round base plate spigot

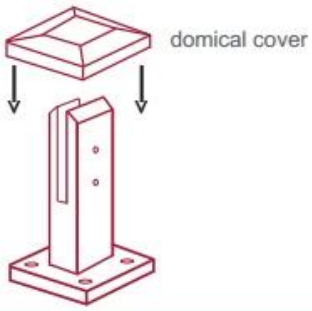

The glass is then installed to the spigots.
Place plastic packers between glass & spigot, at no stage should glass touch the metal
How adjustability works:
1. Place glass in spigot
2. Fix/ tension glass both sides with allen key

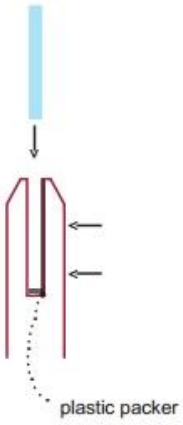

5.ImballaggiodettagliperSBM.Duplex 2205 spigot di vetro-

1 pz in una scatola bianca; 12 pezzi in un cartone-

2014/03/19

6.MassaProduzioneProcessiperSBM.bicchierespigot.-

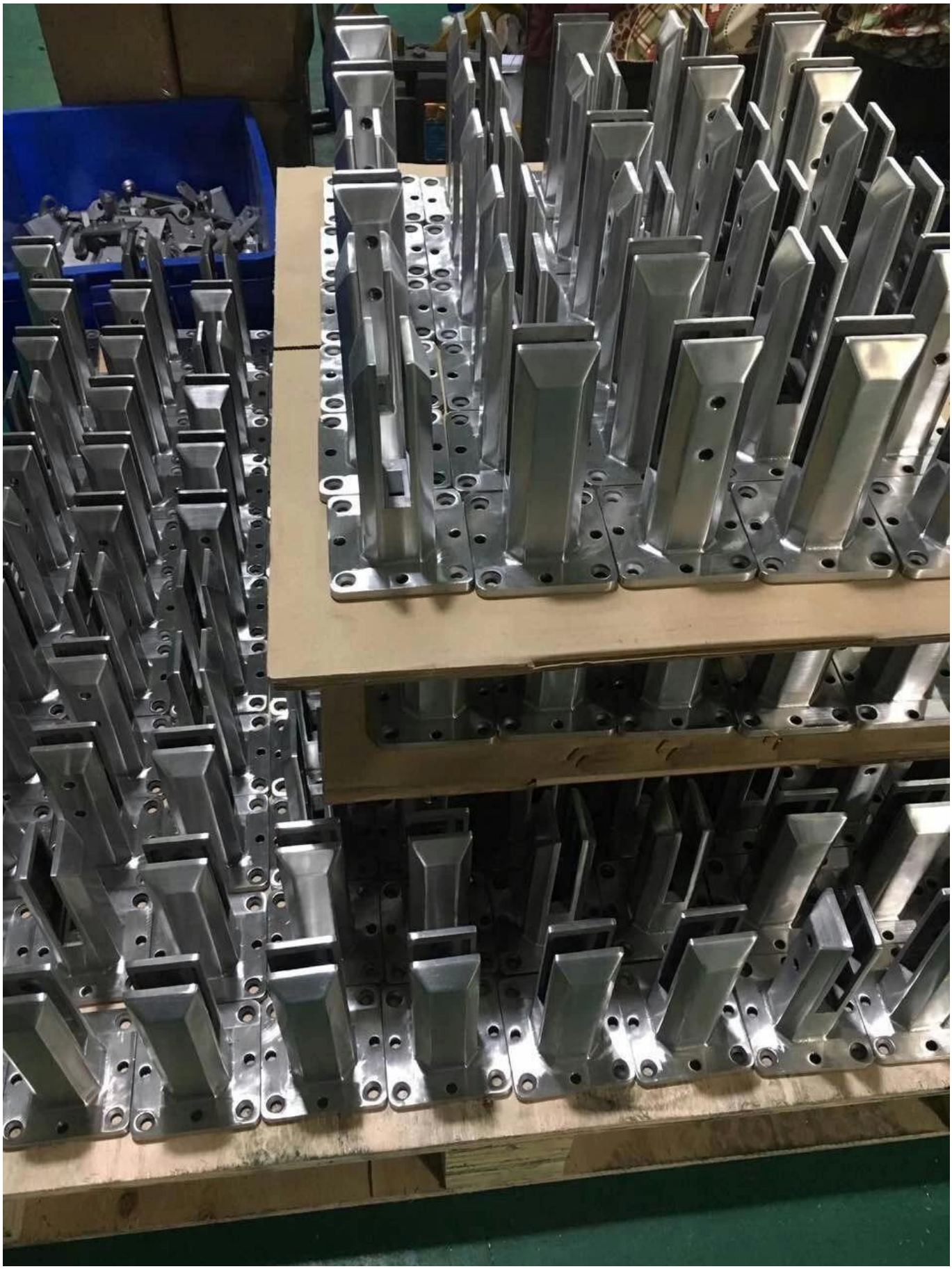

7.Di piùModellidibicchierespigot.peril tuoselezione-

Glass spigot

MODEL # SBM

MODEL # SCM

MODEL # RBM

MODEL # RCM

8.ProgettoFotografiediFrameless.BicchiereRinghiereconbicchierespigots.-

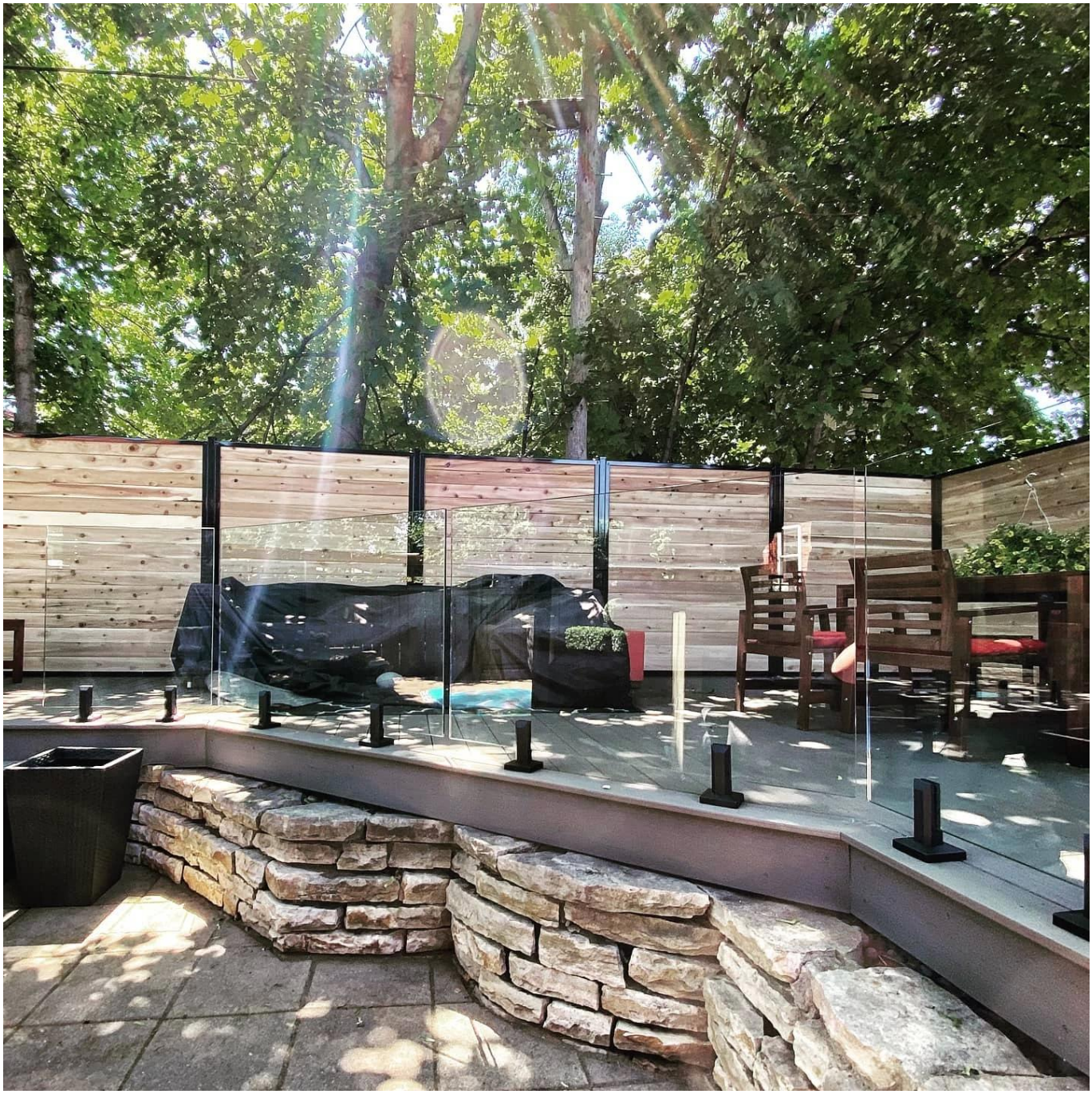

Abbiamo anche cardine in vetro e chiavistelle magnetiche e morsetti di vetro e vetro temperato per andare con l'intero sistema di ringhiera in vetro frameless.

Sentiti libero di contattarci ora per ottenere citazioni!

Shenzhen Launch Co., Ltd
Verificato da SGS, relazione n. 19536352_P + T
Ufficio Aggiungi:
B5-003, 5 / F-Block 3, Yilida Building, No. 1092 Nanshan Road, Distretto di Nanshan, Shenzhen, Cina, Codice Postale 518054

Tel: 86-755-86037559 Fax: 86-755-86372611

Mob (Whatsapp, WeChat, Viber) +86 135 9027 3543

Contatto:Celia.Chen.