Staffa per supporti in vetro, bulloni per supporto in vetro, supporto per parete in vetro specifiche tecniche:

nome del prodotto	Staffa per supporti in vetro, bulloni per supporto in vetro, supporto per parete in vetro
Materiale	Acciaio inossidabile 304/316
Altro nome	standoff di vetro, inferriata di vetro di standoff
finire	Lucidato a specchio o satinato
Dimensione del distanziatore del vetro	Cappuccio 50x12mm, corpo 50x30mm, bullone M12 * 120mm, guarnizione in gomma siliconica inclusa
Per lo spessore del vetro	12-19mm, o secondo i requisiti dei clienti
Foro di vetro forato	Diametro 14mm richiesto in vetro
Peso netto	750g / piece
Montaggio	montaggio a parete / montaggio laterale / montaggio su pannello
MOQ	10 pezzi
Campione	A disposizione
OEM e & Servizio ODM	Accettabile
Applicazione	Design di scale per interni ed esterni, ringhiera per balcone, ringhiera in vetro senza telaio, design di balcone di Giulietta, scala mobile
Ispezione di fabbrica	A disposizione

Dia 50mm Vetro Standoff / Button in **Satin Finish**:

Dia 50mm Vetro Standoff / Button in **Finitura a specchio**:

Con vite per legno per il montaggio su substrato di legno:

Disegno tecnico:

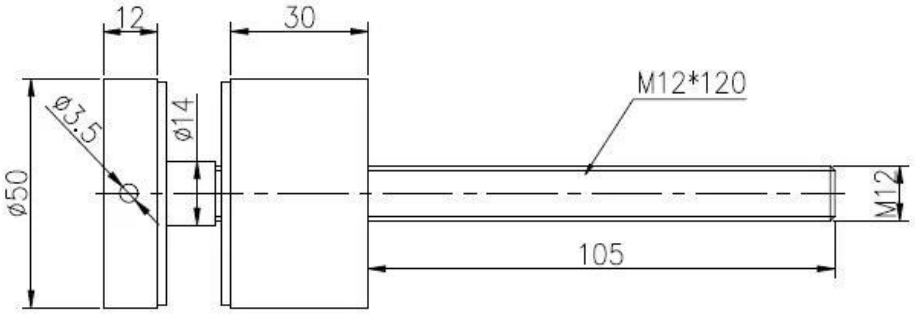

Salesman		Project name	

深圳市朝驰商贸有限公司 SHENZHEN LAUNCH CO.,LTD.			
Design	Jacky	Drawing NO:	
Check			
Craft		Name:Standoff	
Audit			Revision
Approve			V001

Quantity	Total	Page

Surface treatment		Propotion
Material	SS 316	1:1
No note of outity size tolerance		
Linear tolerance	X.	±0.1
	X.X	±0.1
	X.XX	±0.1
Angle tolerance	X.	±1°
	X.X	±0.5°

A4

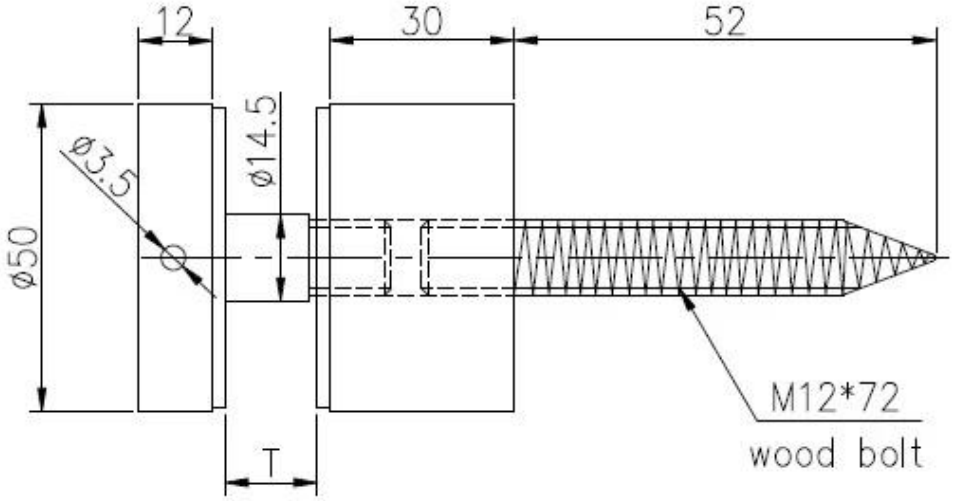

			深圳市朗驰商贸有限公司 SHENZHEN LAUNCH CO.,LTD.				Surface treatment		Propot
			Design	Jacky	Drawing NO:SF-50		Material		1:1
			Check				No note of entity size tolerance		
			Craft		Name:Standoff		Linear tolerance	X.	±0.1
Quantity	Total	Page	Audit			Revision		X.X	±0.1
								X.XX	±0.1
			Approve			V001	Angle tolerance	X.	±1°
								X.X	±0.5°

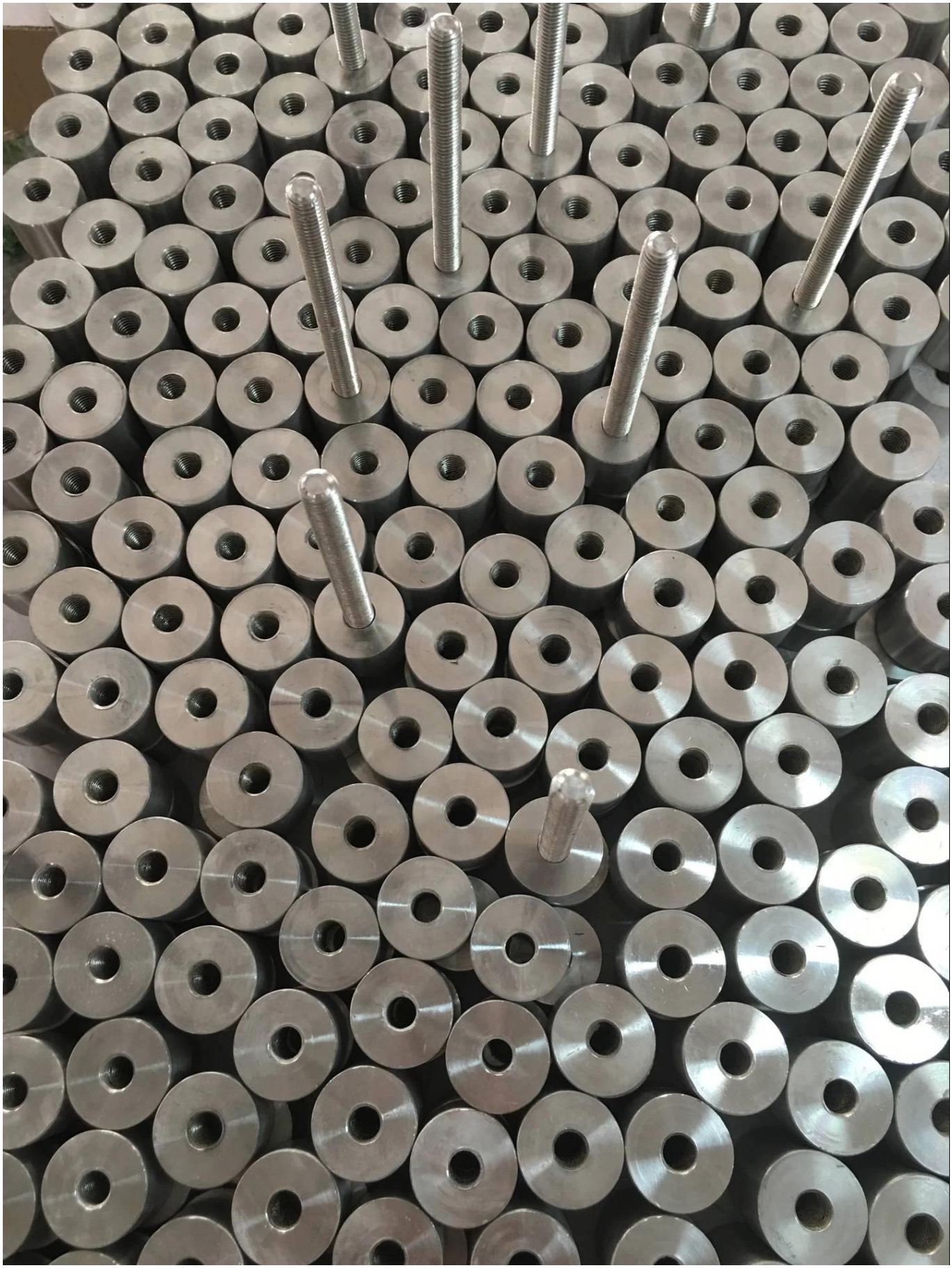

Foto del progetto:
Balaustra in acciaio inossidabile con sistema di balaustra a bottoni in vetro

Standoff di vetro in acciaio inossidabile per balaustra in vetro senza telaio

standoff in acciaio inox, staffa per il design di ringhiere per scale

Informazioni sull'azienda:

Shenzhen Launch Co., Ltd was established in 2004, located at Nanshan District, Shenzhen, and one hour by car from Hongkong International Airport. Our main product is high-grade building materials includes stainless steel balustrade post, staircase handrail, balcony guardrail, swimming pool fence and other high-grade building materials. All the products are designed strictly according to the high-end market requirements. We have our own factory in Tangxia Town, Dongguan, has a variety of precision equipment more than 50 sets: CNC lathe, milling machine, punching machine, pipe cutter, argon welder, drilling machine, polisher, etc. which can provide customers with complete product processing services. With the German SPECTRO Spectrometer, we insist on testing every batch of materials to ensure that the material is highly qualified. We also have hardness gauge, secondary element and other test equipment to ensure the products meets customers' requirements.

ABOUT US

OUR ADVANTAGE

Please do not hesitate to contact us if you have any requirement regarding our production lines, you can expect a timely reply with professional solutions!

Own factory, shortest lead time.

Can help customers design product drawings based on customer ideas and design engineering installation drawing according to the customer site sketch.

Sample order, trial order acceptable.

Provide material test report to ensure that the material is qualified.

13 years of industry experience, we can help customers recommend the best solution to help customers save cost.

OUR FACTORY

More than 13 years experience in hardware industry design and processing, we can provide customized services from design to the sample and small batch trial production.

OUR CERTIFICATE

With premium quality, competitive price and superior service, we won a lot of customers' favor.
Our products are popular in North America, European and Australia.

PRODUCTION PROCESS

Casting

CNC lathe

CNC Milling

Stamping

Drilling & Tapping

Polishing

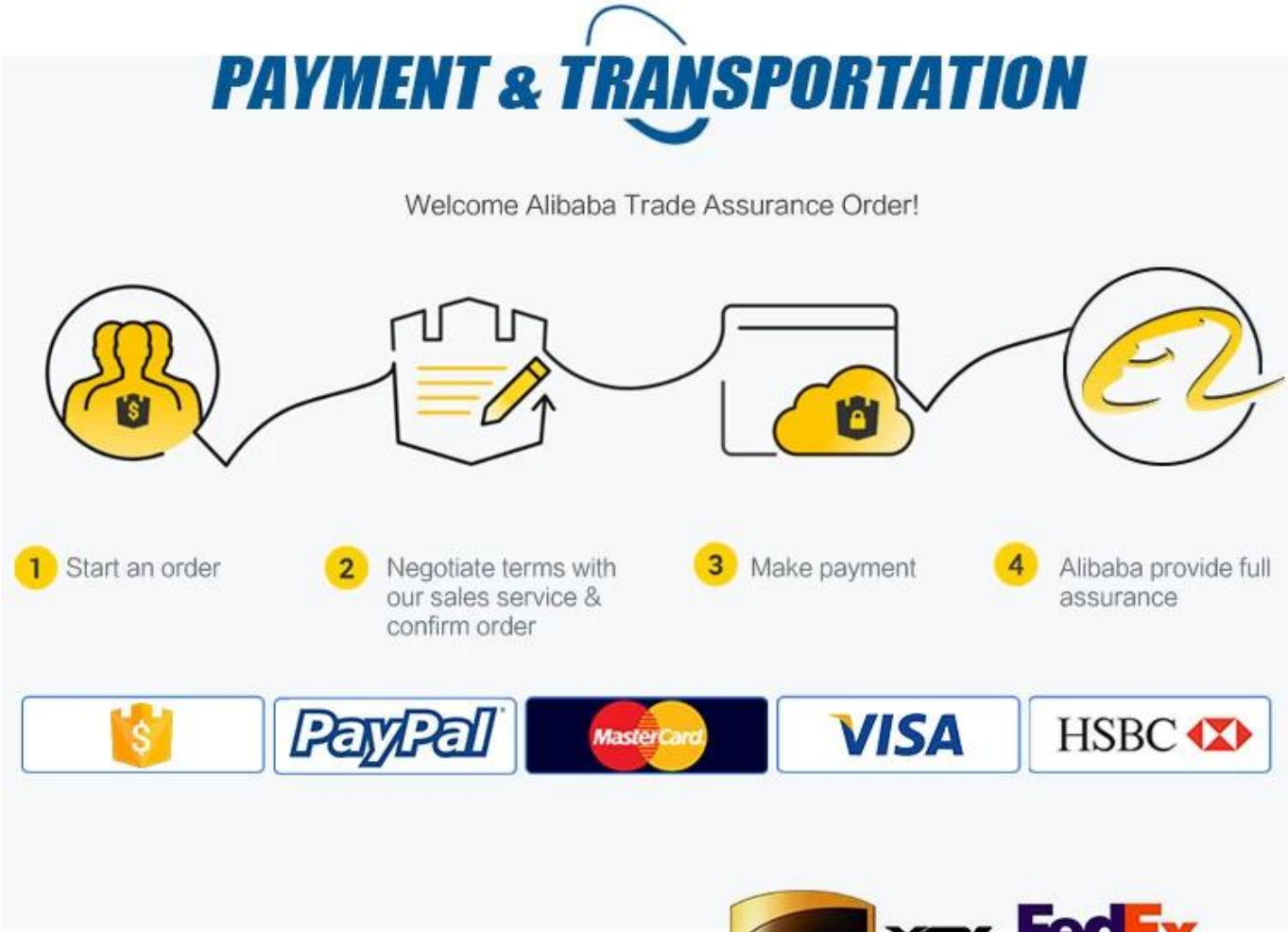

Contattaci ora per maggiori informazioni!

Email: sales03@launch-china.cn
Mob: +8615907334556