Il lancio di Shenzhen è stato fondato dal 2004, e siamo fornitore di Gold SGS per 16 anni. Siamo produttori e fornitori affidabili.

COMPANY INTRODUCTION

Verification Type: Supplier Assessment Onsite Check

Country / Region: Guangdong, China ✓

Year Established: 2004 ✓

Main Products: CNC Machining Parts,Stamping Pa... ✓

Main Markets: North America, Oceania, Mid East,... ✓

Total Annual Revenue: confidential ✓

Total Employees: 11 - 50 People ✓

Alibaba.com Gold Plus Supplier

Main Product Lines Verification Report

Presented to

Shenzhen Launch Co., Ltd.

深圳市朗驰商贸有限公司

Company Address	B5003, Building 3, Yilida Building, No. 1092 Nanshan Avenue, Dengliang Community, Nanshan Street, Nanshan District, Shenzhen City, Guangdong Province, China
Consigner of Assessment:	Alibaba
Gold Supplier Member ID:	launch168
Gold Supplier Company Name:	Shenzhen Launch Co., Ltd.
Contact Person:	Mr. Binfeng Gao
Phone Number:	0086-13802569770
Fax Number:	0086-755-86372611
Email:	gbf999@china.com
Website Address (URL):	http://launch-china.en.alibaba.com

Service Provided by SGS
Report No.: 19536352_P+T

Alibaba.com Global trade starts here. SGS

Alibaba.com Gold Plus Supplier

Verified

Assessment Report

Presented to

Cooperation Company of Shenzhen Launch Co., Ltd.

深圳市朗驰商贸有限公司合作工厂

Gold Supplier & Assessed Company Relationship:	☐ Self-owned ☐ Wholly Owned ☐ Shareholder/Partner ☐ Kindred between Owners ☒ Cooperation Partner
Company Address	Confidential
City / Country:	Huizhou / China
Consigner of Assessment:	Alibaba & Shenzhen Launch Co., Ltd.
Gold Supplier Member ID:	launch168
Gold Supplier Company Name:	Shenzhen Launch Co., Ltd.
Contact Person:	Confidential
Phone Number:	Confidential
Fax Number:	Confidential
Email:	Confidential
Website Address (URL):	http://launch-china.en.alibaba.com

Service Provided by SGS
Report No.: 19552720_P

Alibaba.com Global trade starts here. SGS

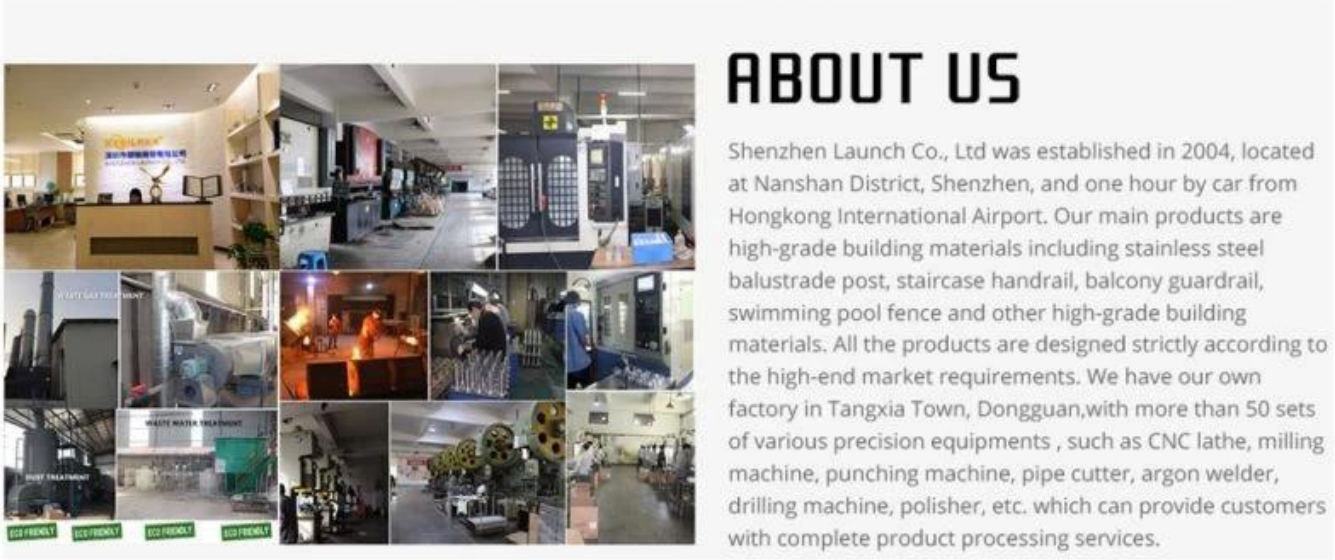

ProdottoSpettacolo

Nome del prodotto	Tenditore per cavi per 2 pollici o tubo da 1,5 pollici
Numero di modello.	T808.
Materiale	SS304 / SS316.
Finitura superficiale	Raso / specchio / altri
Diametro del cavo	4mm, 5mm, 6mm
Applicazione	Sistema di ringhiera dei cavi interni ed esterni

Superficie spazzolata satinata

Specchio lucido superficie

Componenti interni, tre viti M5 * 4 e M5 * 3 per premere la corda del filo

Dimensioni

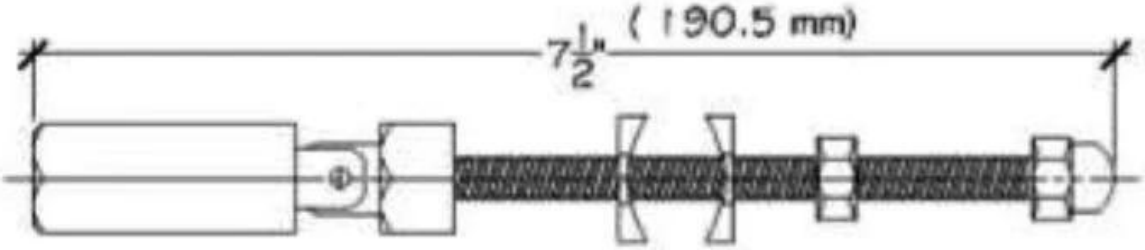

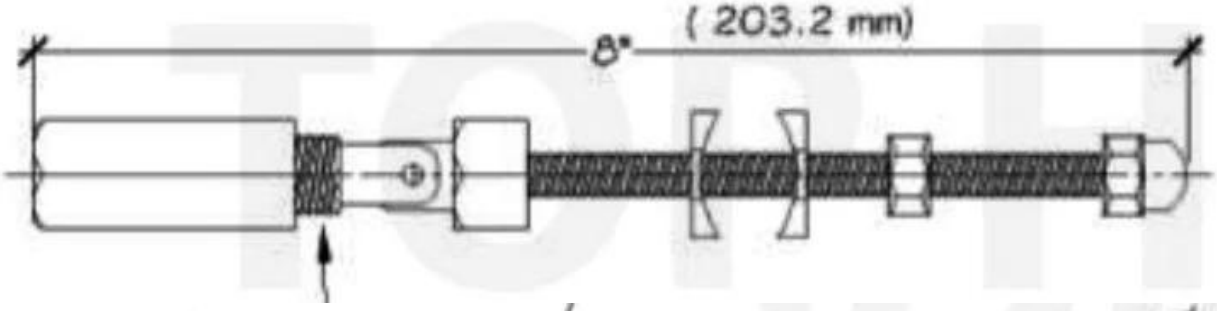

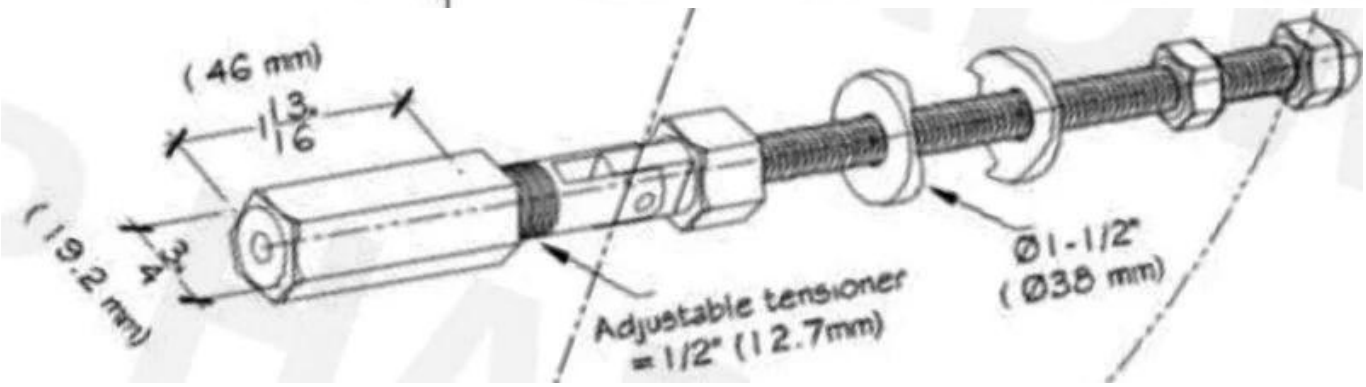

Come usarlo con tubo

MassaProduzione e imballaggio

KBIL 比奥
SHENZHEN LAUNCH CO., LTD
LAUNCH INTERNATIONAL LIMITED
http://www.chinabalustrade.com

AltroTipidicavotenditorinoi siamoa disposizione

Come installare il tenditore del cavo T803

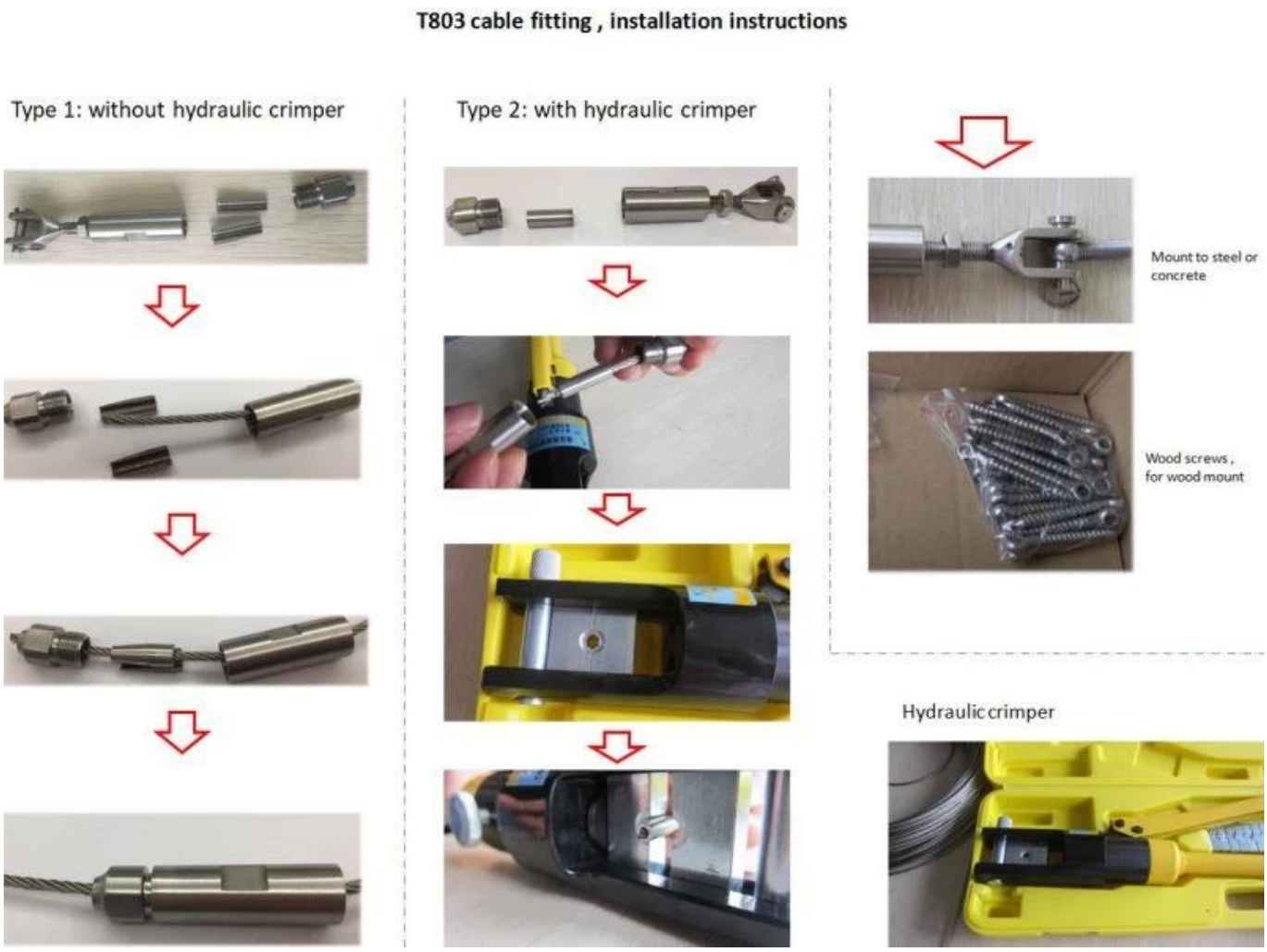

Altri prodotti per costruire la ringhiera dei cavi

Cavo:
Sono disponibili 3 mm, 4 mm, 5 mm, 6 mm e altre dimensioni

Post della ringhiera dei cavi

Square post, vertical mount
40*40mm, 50*50mm recommended

Round post, vertical mount
Dia.: 42.4mm, 50.8mm recommended

Round post, side mount
Dia.: 42.4mm, 50.8mm recommended

Progettospettacolo

KEBIL科比奥®

KEBIL科比奥®

Dovresti avere alcune richieste per loro, non esitare a contattarmi
Frank Fang.
Email: sales02@launch-china.cn.
Telefono / Whatsapp / WeChat: +86 159 0626 1741